NITTO KOHKI

AUTO HINGES

NITTO KOHKI Sliding Closer

New-generation sliding door closers developed with user-friendly technologies.

NITTO KOHKI Sliding Closer

Horizontal for Bathroom
NSC-CB

Horizontal **NSC-C**

Inclined **DSC-C**

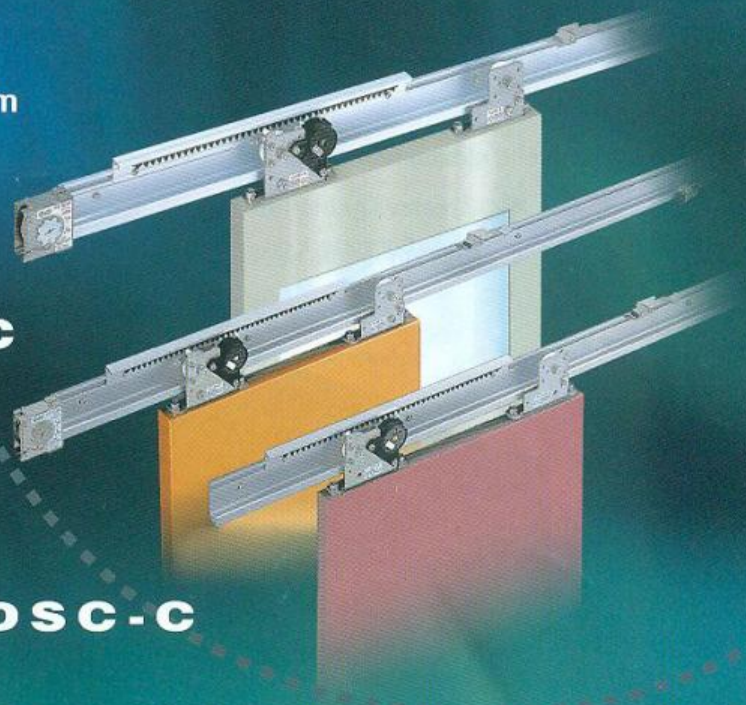

We propose a new style of door opening/closing.

User-friendly technology
AUTO HINGES

ISO 14001
JQA-EM4057

Green Procurement
Products Comply with RoHS Directive

SLIDING CLOSER SYSTEM

New sliding closers DSC-C (incl (horizontal) series "Innovation a

Long service life

- The control device incorporates a fluid friction resistance, one-way clutch mechanism to ensure secure control, small size, and a long service life.

Light door-opening force

- Since door resistance is low, the door can be opened easily even by elderly citizens, young children, and people with disabilities.
  Initial door-opening force at a door weight of 40kg
  DSC-C08 type, 6.7N; NSC-C36 type, 5.7N

A large variety of models

- Many models designed for wooden, steel, and aluminum fittings. The options available are interlocking system and shutter box type.

Easy to install

- The only modifications made on the frame are the making of rail-mounting holes. All parts can be installed on the rail with a screwdriver. The product is therefore easy to install.

Both for right- and left-handed ope

- The product can be converted between the right- and left-handed opening types by a simple operation.

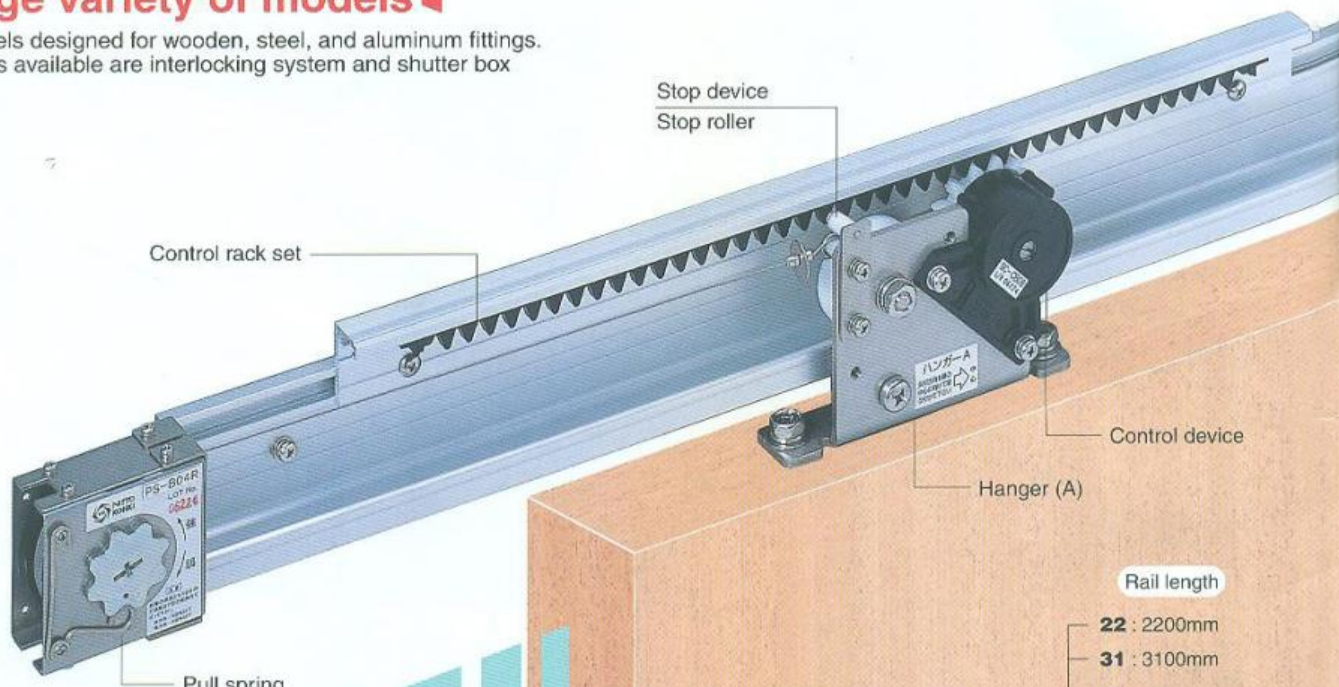

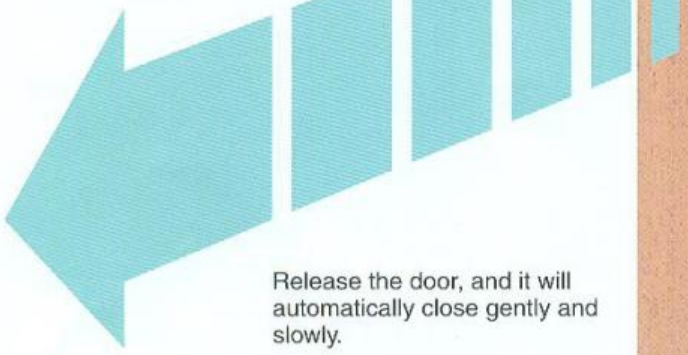

Release the door, and it will automatically close gently and slowly.

□ S C - □□ □□ - □□

Rail length
- **22** : 2200mm
- **31** : 3100mm

Model
- **D** : Inclined
- **N** : Horizontal

Door weight
- **3** : 10-30kg
- **6** : 30-60kg (Horizontal)
- **8** : 60-80kg (Horizontal)
  30-80kg (Inclined)
- **15** : 80-150kg

Pull spring
- **0** : Inclined
- **2** : PS-02
- **3** : PS-03
- **4** : PS-04
- **12** : PS-12

Applicable doors
- **CW** : for wooden fittings
- **C** : for steel lightweight fittings
- **CB** : for lightweight fittings in bathrooms

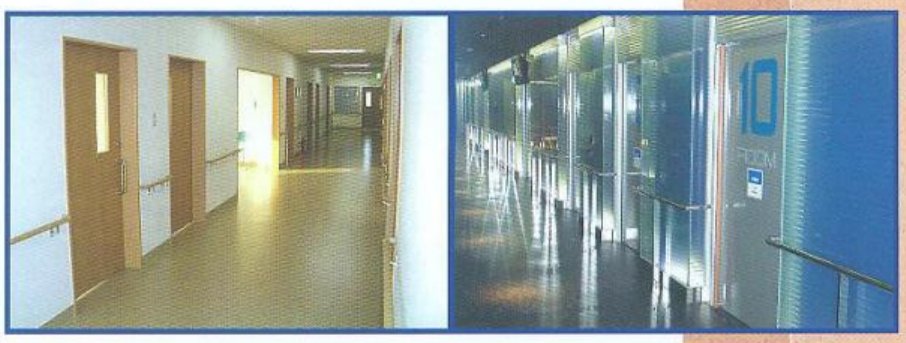

ned) and NSC-C
nd Simplicity"

ing types

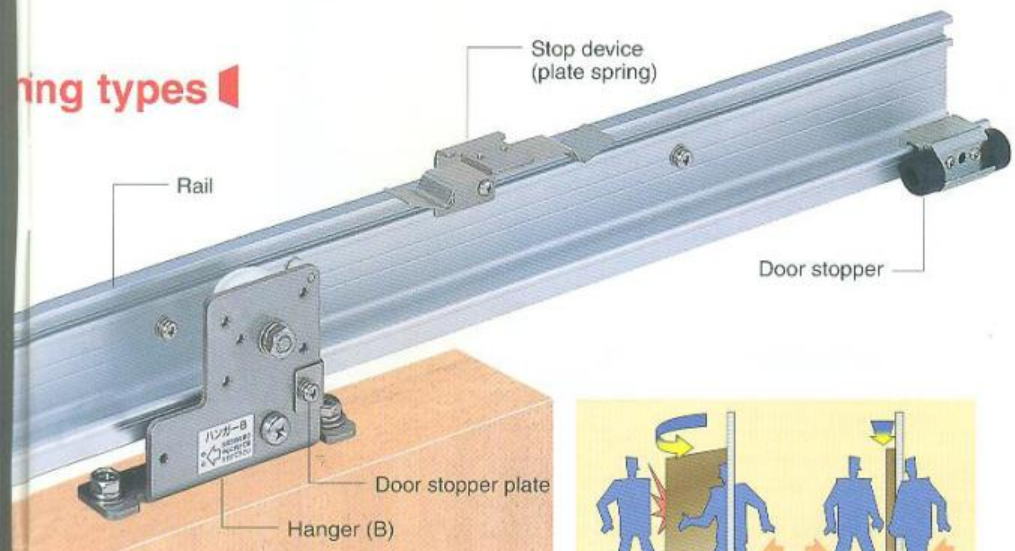

The sliding door closer system eliminates dead space and ensures high safety.

■ Application

● Wooden fittings, inclined DSC-CW series

Applicable door	Model	Door weight (kg)	Applicable door width (mm)
Wooden doors	DSC-CW03	10-30	700-1600
	DSC-CW08	30-80	

● Wooden fittings, horizontal NSC-CW series

Applicable door	Model	Door weight (kg)	Applicable door width (mm)
Wooden doors	NSC-CW23	10-30	700-1600
	NSC-CW36	30-60	
	NSC-CW48	60-80	

● Steel lightweight fittings, inclined DSC-C series

Applicable door	Model	Door weight (kg)	Applicable door width (mm)
Steel doors	DSC-C03	10-30	700-1600
	DSC-C08	30-80	
	DSC-C015	80-150	

● Steel lightweight fittings, horizontal NSC-C series

Applicable door	Model	Door weight (kg)	Applicable door width (mm)
Steel doors	NSC-C23	10-30	700-1600
	NSC-C36	30-60	
	NSC-C48	60-80	
	NSC-C1215	80-150	

● Lightweight fittings in bathrooms, horizontal type for bathrooms NSC-CB series

Applicable door	Model	Door weight (kg)	Applicable door width (mm)
Steel light-weight doors Aluminum doors	NSC-CB23	10-30	700-1600
	NSC-CB36	30-60	
	NSC-CB48	60-80	

INDEX

Application 2

● Wooden fittings

DSC-CW03/specifications
DSC-CW08/specifications 3·4

DSC-CW03·08/Installation diagrams 5·6

NSC-CW23/specifications
NSC-CW36·48/specifications 7·8

NSC-CW23·36·48/Installation diagrams 9·10

● Steel lightweight fittings

DSC-C03·08/specifications
DSC-C03·08/Installation diagrams 11·12

DSC-C015/Installation diagrams 13·14

NSC-C23·36·48/specifications
NSC-C23·36·48/Installation diagrams 15·16

NSC-C1215/Installation diagrams 17·18

● Option

Single action double Sliding system 19·20

Bi-Parting system,SC-W 21·22

Free stopper (SFS-A) 23

Back checker 23

Delayed device 23

Maintenance cover 23

● Lightweight fittings in bathrooms

NSC-CB/Installation diagrams 25·26

● List of parts

DSC-C015/NSC-C1215 27

NSC-CB 28

NSC-C/DSC-C 29

● Q&A on Troubleshooting 30

SLIDING CLOSER SYSTEM

For wooden fittings, inclined, with door weights of 10-30kg

DSC-CW03 series

Reliable, Cost Effective, Sliding Doors Closers – Simple to Use & Install

Features

- A standardized set of parts required for inclined wooden fitting types. (The product comes standard with a guide rail, guide roller, stop device, and other equipment.)
- Coach screws allow the hanger to be attached directly to the door.
- An endless fluid friction resistance system ensures a long life.
- The product can be converted to the right- and left-handed opening types by simple operation.
- It is easy to install with a screwdriver.

Specifications

Model		DSC-CW03-22	DSC-CW03-31
Applicable doors	Weight [kg]	10-30	
	Width [mm]	700-1200	1200-1600
Max. stroke [mm]		1500	
Closing drive system		Rail inclination (3.5/300)	
Controlling system		Fluid friction resistance type	
Controlling time		7-11 seconds (with a door-opening distance of 900mm)	
Initial opening force [N]		2.3-5.4	
Durability		More than 1 million open/close operations	
Rail length [m]		2.2	3.1

Part details

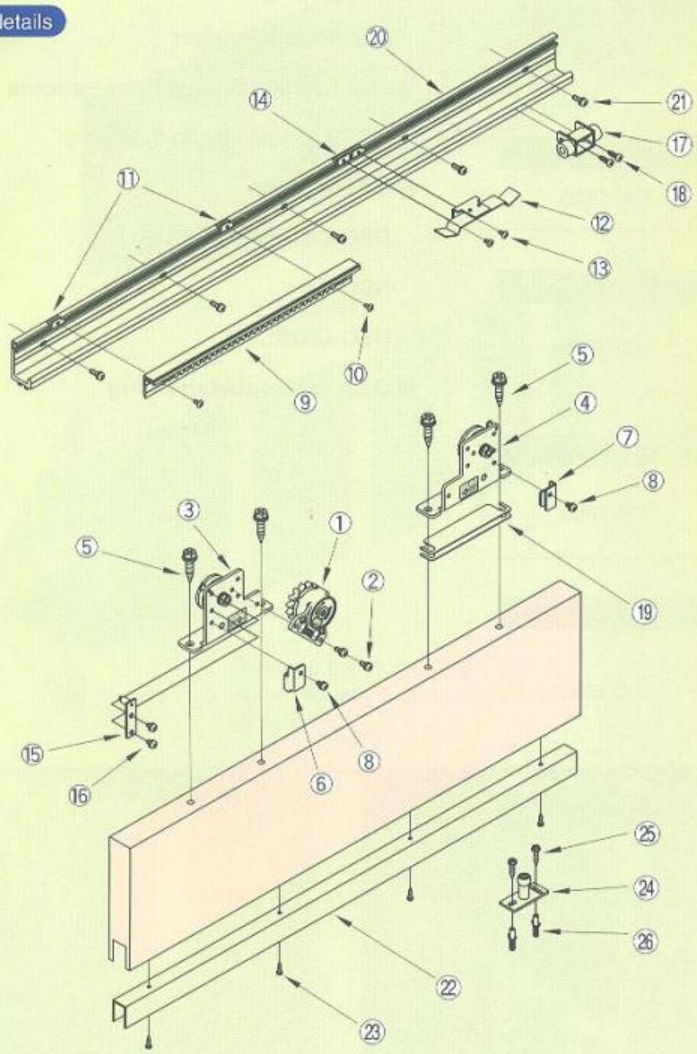

No.	Part	Q'ty	Remark
①	Control device	1	For control device
②	M5×12 pan head screw	2	
③	Hanger A	1	For hanger
④	Hanger B	1	
⑤	φ8×50 coach screw	4	
⑥	Door retention fiting Hanger A	1	Door retention
⑦	Door retention fiting Hanger B	1	
⑧	Pan head screw M5×8	2	
⑨	Control rack set	1	For control rack set
⑩	M4×8 truss screw	2	
⑪	Plate nut	2	
⑫	Plate spring	1	For stop device
⑬	M4×8 truss screw	2	
⑭	Plate nut	2	
⑮	Stop roller	1	
⑯	M5×8 pan head screw	2	
⑰	Door stopper fitting	1	For door stopper
⑱	φ5×16 pan head tapping screw	2	
⑲	Height adjusting plate (t = 1.0, 0.5)	15+1	
⑳	Rail L = 2200 [L = 3100]	1	For rail
㉑	M5×16 pan head screw	8[11]	
	φ5×30 truss tapping screw	8[11]	
㉒	Guide rail L = 1300 [L = 1600] ※	1	For guide rail
㉓	φ4×16 pan head tapping screw	5[6]	
㉔	Guide roller φ16	1	For guide roller
㉕	φ5×25 Hexagon tapping screw	2	
	M5×12 Hexagon screw	2	
㉖	Curl plug	2	

※Guide rail : Rail 2.2m Guide rail 1.3m
Rail 3.1m Guide rail 1.6m

For wooden fittings, inclined, with door weights of 30-80kg

DSC-CW08 series

Reliable, Cost Effective, Sliding Doors Closers – Simple to Use & Install

Features

- A standardized set of parts required for inclined wooden fitting types. (The product comes standard with a guide rail, guide roller, stop device, and other equipment.)
- An endless fluid friction resistance system ensures a long life.
- The product can be converted to the right- and left-handed opening types by simple operation.
- It is easy to install with a screwdriver.

Specifications

Model		DSC-CW08-22	DSC-CW08-31
Applicable doors	Weight [kg]	30-80	
	Width [mm]	700-1200	1200-1600
Max. stroke [mm]		1500	
Closing drive system		Rail inclination (3.5/300)	
Controlling system		Fluid friction resistance type	
Controlling time		7-11 seconds (with a door-opening distance of 900mm)	
Initial opening force [N]		5.4-12.5	
Durability		More than 1 million open/close operations	
Rail length [m]		2.2	3.1

Part details

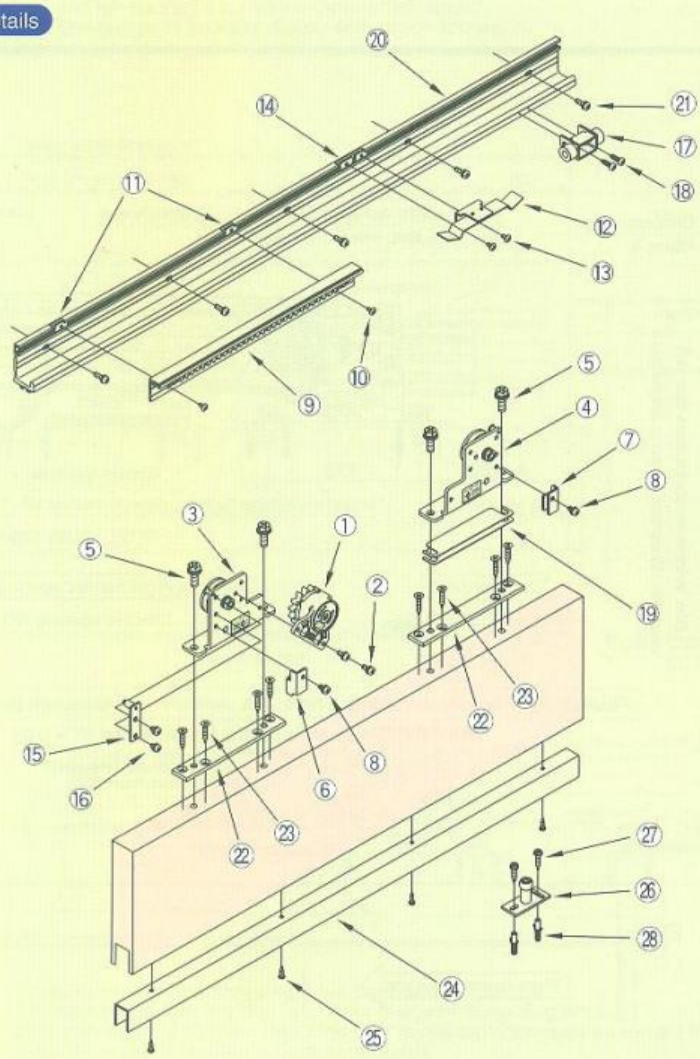

No.	Part	Q'ty	Remark
①	Control device	1	For control device
②	M5×12 pan head screw	2	
③	Hanger A	1	For hanger
④	Hanger B	1	
⑤	M8×25 hexagon head bolt	2	
	M8×30 hexagon head bolt	2	
⑥	Door retention fiting Hanger A	1	Door retention
⑦	Door retention fiting Hanger B	1	
⑧	Pan head screw M5×8	2	
⑨	Control rack set	1	For control rack set
⑩	M4×8 truss screw	2	
⑪	Plate nut	2	
⑫	Plate spring	1	For stop device
⑬	M4×8 truss screw	2	
⑭	Plate nut	2	
⑮	Stop roller	1	
⑯	M5×8 pan head screw	2	
⑰	Door stopper fitting	1	For door stopper
⑱	φ5×16 pan head tapping screw	2	
⑲	Height adjusting plate (t = 1.0, 0.5)	15+1	
⑳	Rail L = 2200 [L = 3100]	1	For rail
㉑	M5×16 pan head screw	8[11]	
	φ5×30 truss tapping screw	8[11]	
㉒	Wooden door plate	2	For wooden door plate
㉓	φ5×30 flat head tapping screw	8	
㉔	Guide rail L = 1300 [L = 1600]※	1	For guide rail
㉕	φ4×16 pan head tapping screw	5[6]	
㉖	Guide roller φ16	1	For guide roller
㉗	φ5×25 Hexagon tapping screw	2	
	M5×12 Hexagon screw	2	
㉘	Curl plug	2	

※Guide rail : Rail 2.2m Guide rail 1.3m
Rail 3.1m Guide rail 1.6m

Installation diagrams DSC-CW03

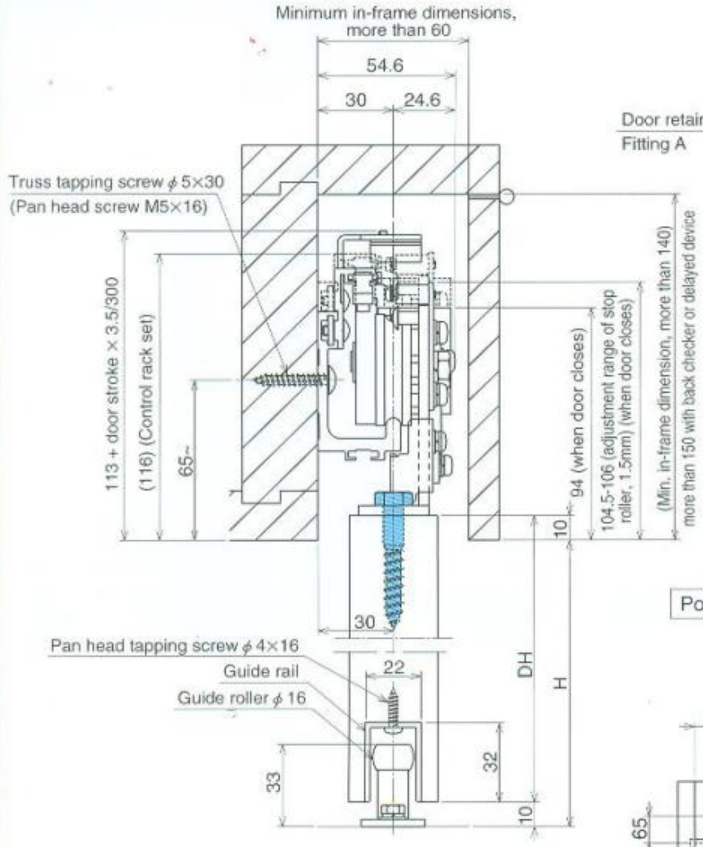

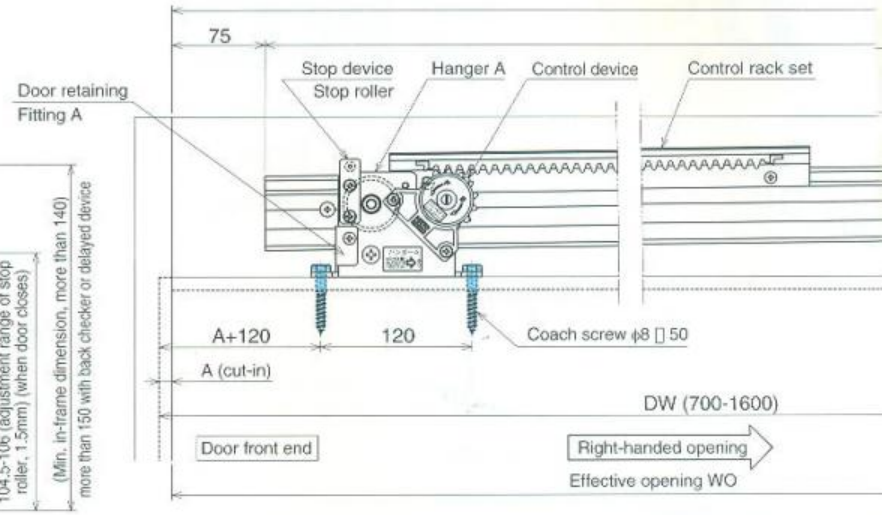

Position diagram for rail-mounting holes (as viewed from inspection panel)

*When handling a steel frame, tap M5 holes (P = 0.8).

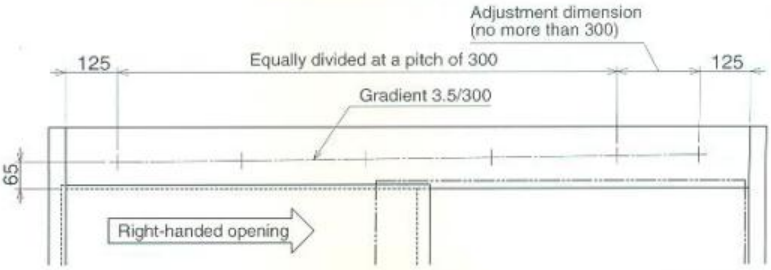

Installation diagrams DSC-CW08

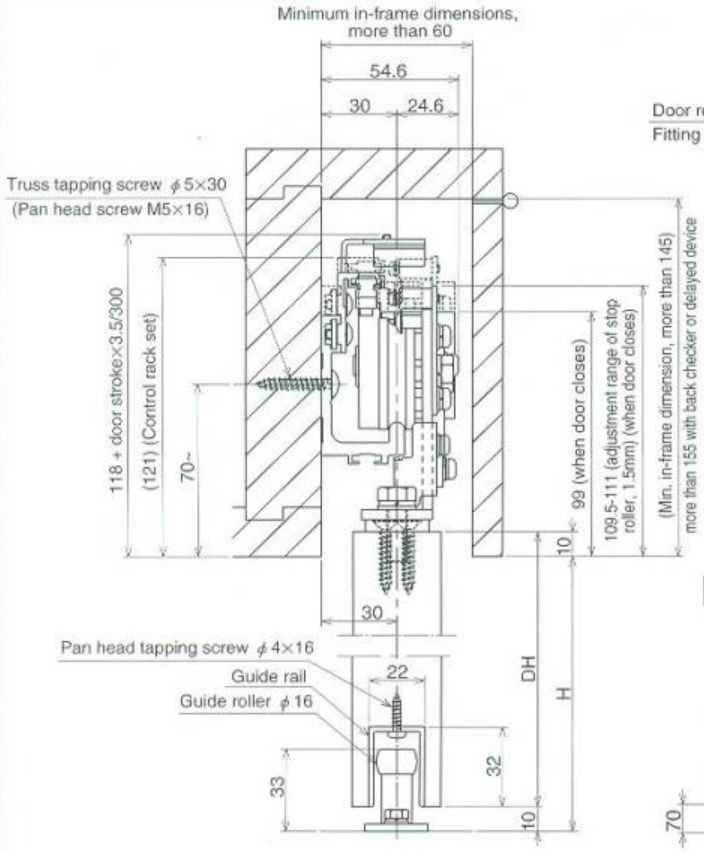

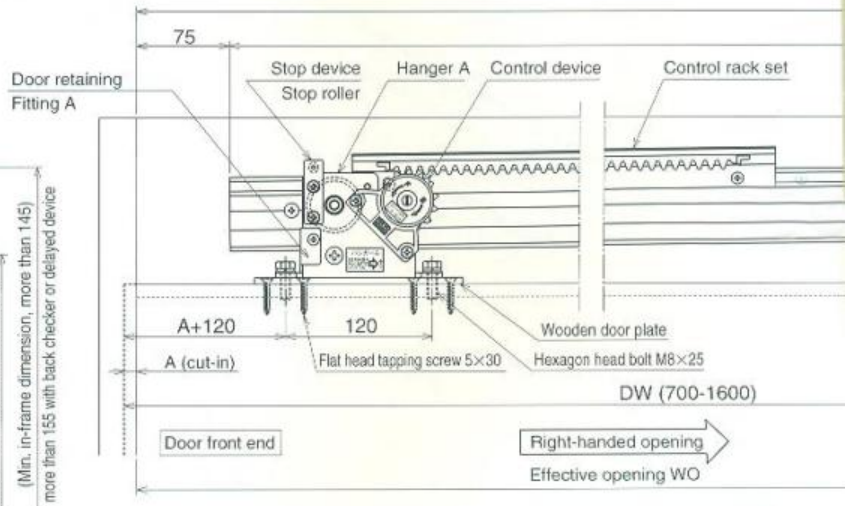

Position diagram for rail-mounting holes (as viewed from inspection panel)

*When handling a steel frame, tap M5 holes (P = 0.8).

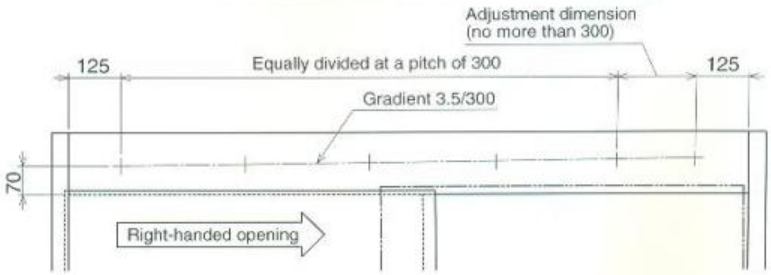

DSC-CW03

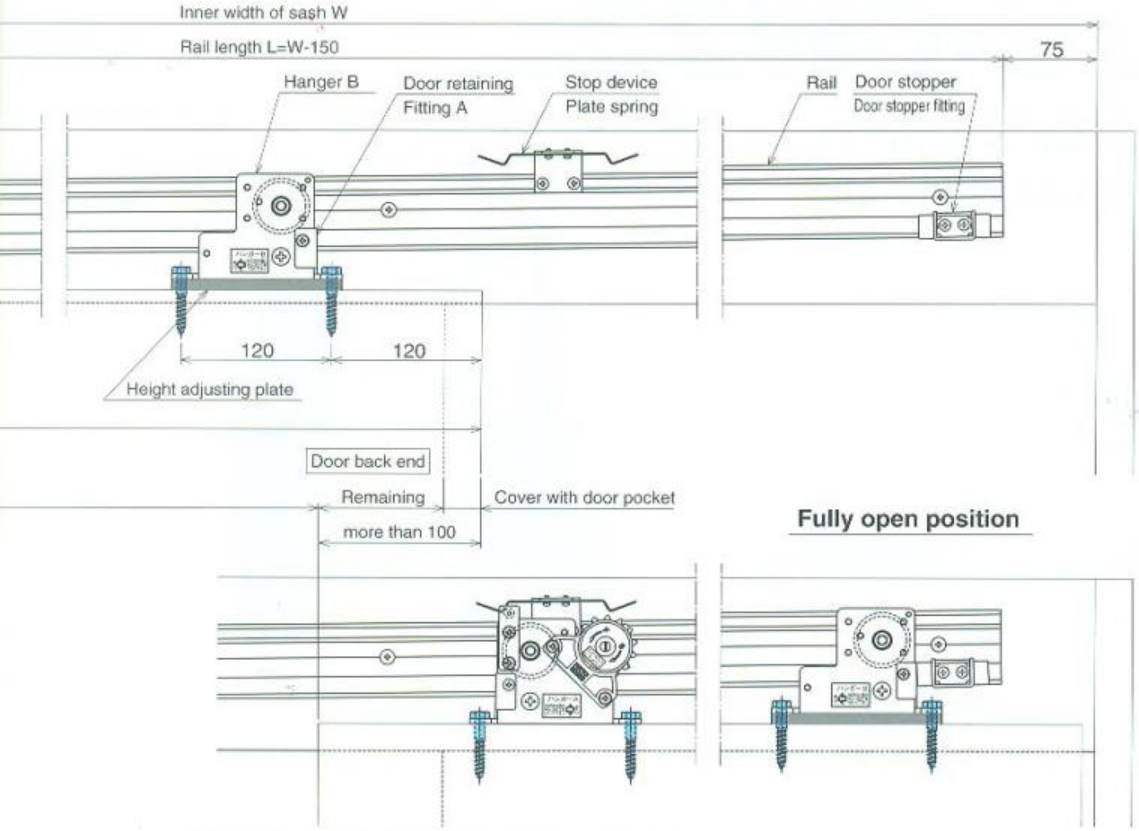

Number of height adjusting plates (reference)

Door width [mm]	No. of plates used
700-800 or less	6 pcs.
800-900 or less	7 pcs.
900-1000 or less	8 pcs.
1000-1100 or less	9 pcs.
1100-1200 or less	10 pcs.
1200-1300 or less	12 pcs.
1300-1400 or less	13 pcs.
1400-1500 or less	14 pcs.
1500-1600 or less	15 pcs.

1. These diagrams represent a right-handed opening type.
   The left-handed opening type is a mirror image of these diagrams.
2. Door orientation is right-handed if the door is opened rightwards as viewed from the inspection panel, and left-handed if the door is opened leftwards.
3. The hanger is installed directly with coach screws.

DSC-CW08

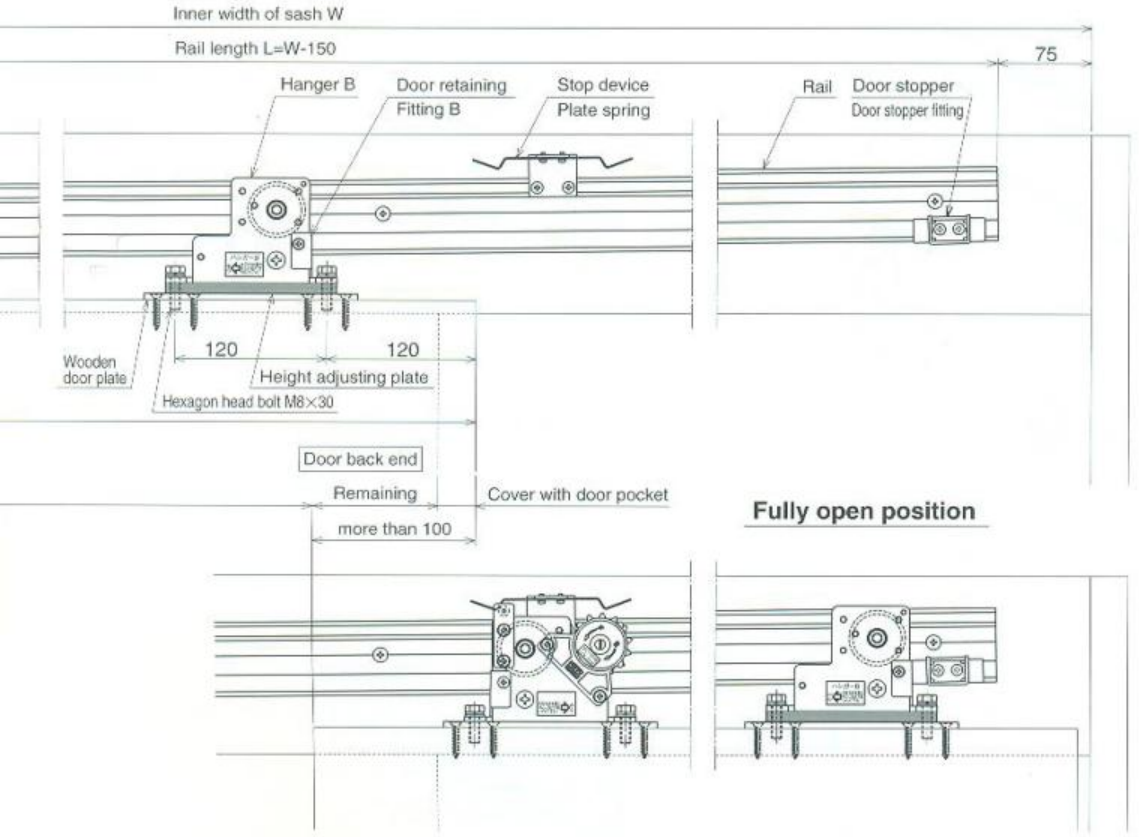

Number of height adjusting plates (reference)

Door width [mm]	No. of plates used
700-800 or less	6 pcs.
800-900 or less	7 pcs.
900-1000 or less	8 pcs.
1000-1100 or less	9 pcs.
1100-1200 or less	10 pcs.
1200-1300 or less	12 pcs.
1300-1400 or less	13 pcs.
1400-1500 or less	14 pcs.
1500-1600 or less	15 pcs.

1. These diagrams represent a right-handed opening type.
   The left-handed opening type is a mirror image of these diagrams.
2. Door orientation is right-handed if the door is opened rightwards as viewed from the inspection panel, and left-handed if the door is opened leftwards.

SLIDING CLOSER SYSTEM

For wooden fittings, horizontal, with door weights of 10-30kg

NSC-CW23 series

Reliable, Cost Effective, Sliding Doors Closers – Simple to Use & Install

Features

- A standardized set of parts required for horizontal wooden fitting types. (The product comes standard with a guide rail, guide roller, stop device, and other equipment.)
- Coach screws allow the hanger to be attached directly to the door.
- An endless fluid friction resistance system ensures a long life.
- The product can be converted to the right- and left-handed opening types by simple operation.
- It is easy to install with a screwdriver.

Specifications

Model		NSC-CW23-22	NSC-CW23-31
Applicable doors	Weight [kg]	10-30	
	Width [mm]	700-1200	1200-1600
Max. stroke [mm]		1500	
Closing drive system		Spiral spring type	
Controlling system		Fluid friction resistance type	
Controlling time		7-11 seconds (with a door-opening distance of 900mm)	
Initial opening force [N]		3.5-4.6	
Durability		more than 1 million open/close operations	
Pull spring		PS-02	
Rail length [m]		2.2	3.1

Part details

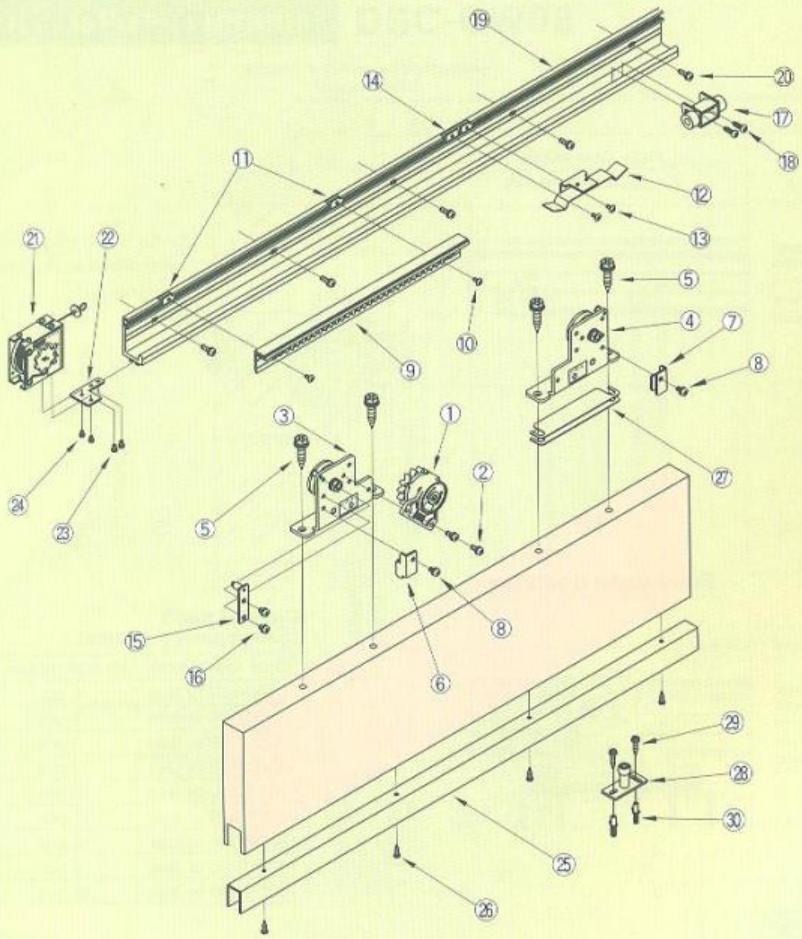

No.	Part	Q'ty	Remark
①	Control device	1	For control device
②	M5×12 pan head screw	2	
③	Hanger A	1	For hanger
④	Hanger B	1	
⑤	φ8×50 coach screw	4	
⑥	Door retention fiting Hanger A	1	Door retention
⑦	Door retention fiting Hanger B	1	
⑧	Pan head screw M5×8	2	
⑨	Control rack set	1	For control rack set
⑩	M4×8 truss screw	2	
⑪	Plate nut	2	
⑫	Plate spring	1	For stop device
⑬	M5×8 truss screw	2	
⑭	Plate nut	2	
⑮	Stop roller	1	
⑯	M5×8 pan head screw	2	
⑰	Door stopper fitting	1	For door stopper
⑱	φ5×16 pan head tapping screw	2	
⑲	Rail L = 2200 [L = 3100]	1	For rail
⑳	M5×16 truss screw	8[11]	
	φ5×30 truss tapping screw	8[11]	
㉑	Pull spring	1	For pull spring
㉒	Pull spring fitting	1	
㉓	M4×5 pan head screw	2	
㉔	M3×8 pan head screw	2	
㉕	Guide rail L = 1300 [L = 1600]※	1	For guide rail
㉖	φ4×16 pan head tapping screw	5[6]	
㉗	Height adjusting plate (t=1.0)	4	
㉘	Guide roller φ16	1	For guide roller
㉙	φ5×25 Hexagon tapping screw	2	
	M5×12 Hexagon screw	2	
㉚	Curl plug	2	

※Guide rail : Rail 2.2m Guide rail 1.3m
Rail 3.1m Guide rail 1.6m

For wooden fittings, horizontal, with door weights of 30-60kg and 60-80kg

NSC-CW36·48 series

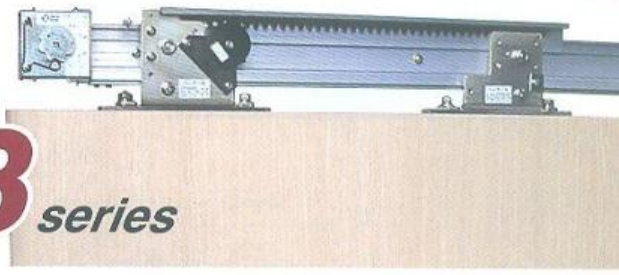

Reliable, Cost Effective, Sliding Doors Closers – Simple to Use & Install

Features

- A standardized set of parts required for horizontal wooden fitting types. (The product comes standard with a guide rail, guide roller, stop device, and other equipment.)
- An endless fluid friction resistance system ensures a long life.
- The product can be converted to the right- and left-handed opening types by simple operation.
- It is easy to install with a screwdriver.

Specifications

Model		NSC-CW36-22	NSC-CW36-31	NSC-CW48-22	NSC-CW48-31
Applicable doors	Weight [kg]	30-60		60-80	
	Width [mm]	700-1200	1200-1600	700-1200	1200-1600
Max. stroke [mm]		1500			
Closing drive system		Spiral spring type			
Controlling system		Fluid friction resistance type			
Controlling time		7-11 seconds (with a door-opening distance of 900mm)			
Initial opening force [N]		4.7-6.9		7.0-8.0	
Durability		more than 1 million open/close operations			
Pull spring		PS-03		PS-04	
Rail length [m]		2.2	3.1	2.2	3.1

Part details

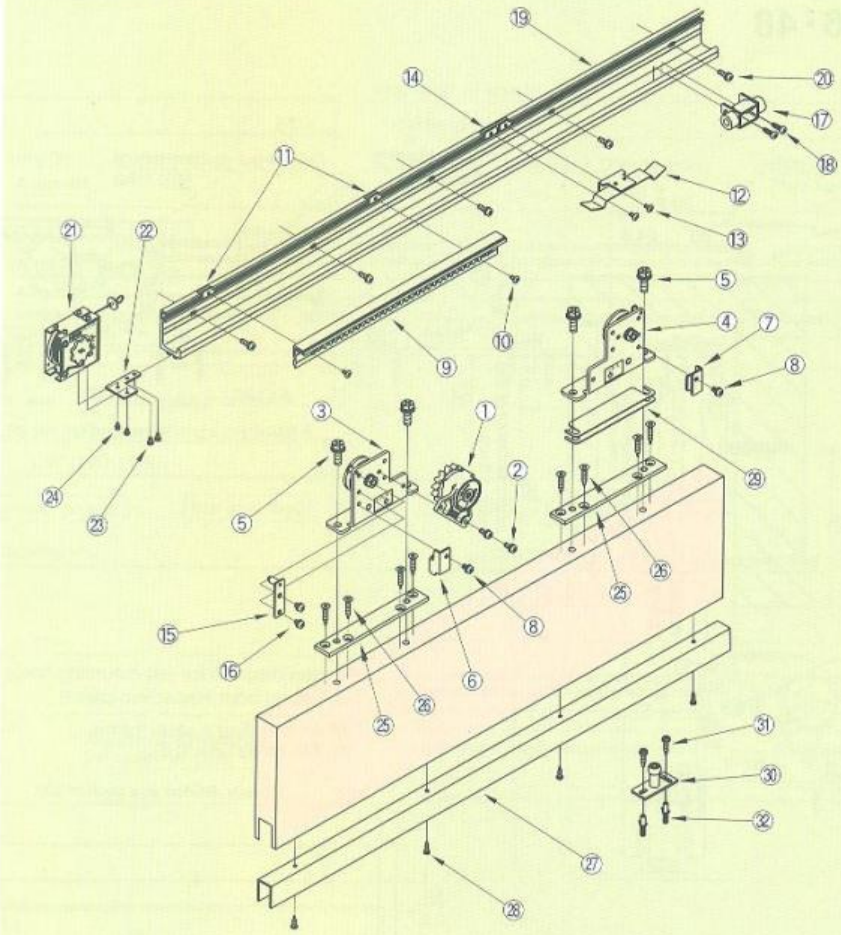

No.	Part	Q'ty	Remark
①	Control device	1	For control device
②	M5×12 pan head screw	2	
③	Hanger A	1	For hanger
④	Hanger B	1	
⑤	M8×25 hexagon head bolt	4	
⑥	Door retention fiting Hanger A	1	Door retention
⑦	Door retention fiting Hanger B	1	
⑧	Pan head screw M5×8	2	
⑨	Control rack set	1	For control rack set
⑩	M4×8 truss screw	2	
⑪	Plate nut	2	
⑫	Plate spring	1	For stop device
⑬	M4×8 truss screw	2	
⑭	Plate nut	2	
⑮	Stop roller	1	
⑯	M5×8 pan head screw	2	
⑰	Door stopper fitting	1	For door stopper
⑱	ϕ5×16 pan head tapping screw	2	
⑲	Rail L = 2200 [L = 3100]	1	For rail
⑳	M5×16 truss screw	8[11]	
	ϕ5×30 truss tapping screw	8[11]	
㉑	Pull spring	1	For pull spring
㉒	Pull spring fitting	1	
㉓	M4×5 pan head screw	2	
㉔	M3×8 pan head screw	2	
㉕	Wooden door plate	2	For wooden door plate
㉖	ϕ5×30 flat head tapping screw	8	
㉗	Guide rail L = 1300 [L = 1600]※	1	For guide rail
㉘	ϕ4×16 pan head tapping screw	5[6]	
㉙	Height adjusting plate (t=1.0)	4	
㉚	Guide roller ϕ16	1	For guide roller
㉛	ϕ5×25 Hexagon tapping screw	2	
	M5×12 Hexagon screw	2	
㉜	Curl plug	2	

※ Guide rail : Rail 2.2m Guide rail 1.3m, Rail 3.1m Guide rail 1.6m

Installation diagrams NSC-CW23

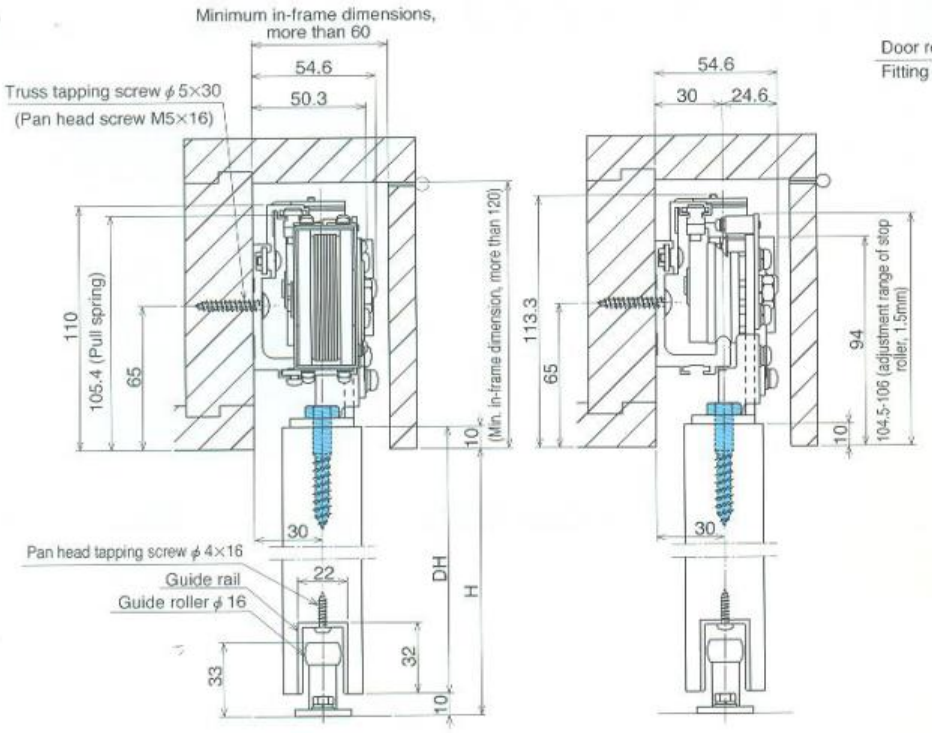

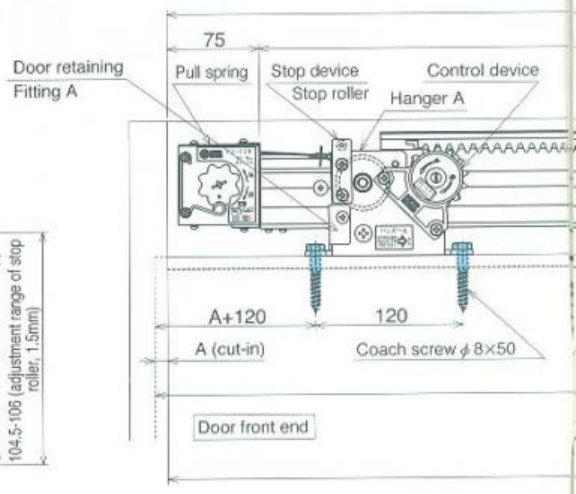

Position diagram for rail-mounting holes (as viewed from inspection panel)

*When handling a steel frame, tap M5 holes (P = 0.8).

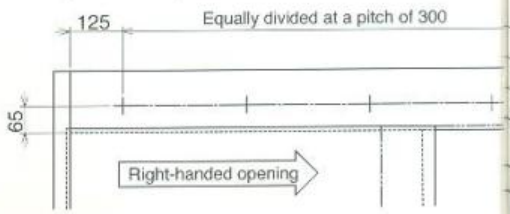

Installation diagrams NSC-CW36・48

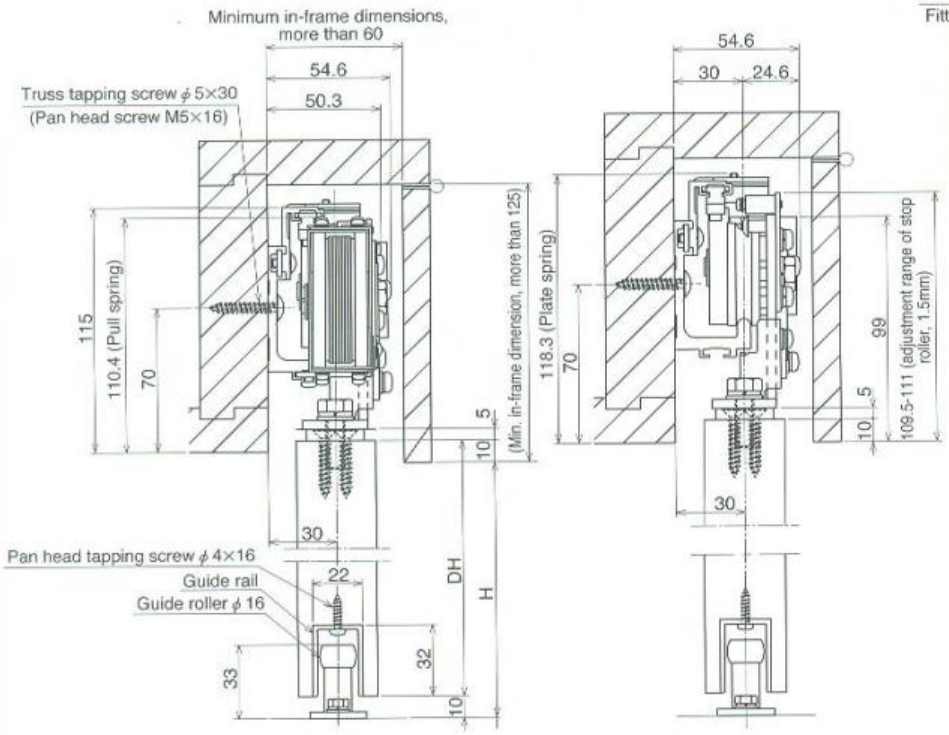

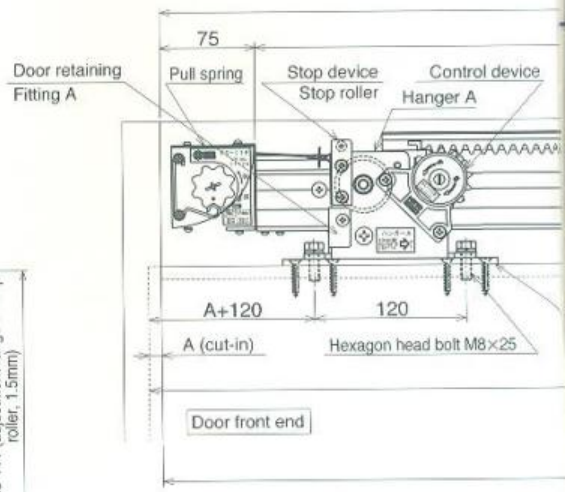

Position diagram for rail-mounting holes (as viewed from inspection panel)

*When handling a steel frame, tap M5 holes (P = 0.8).

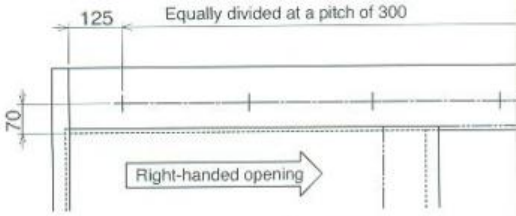

NSC-CW23

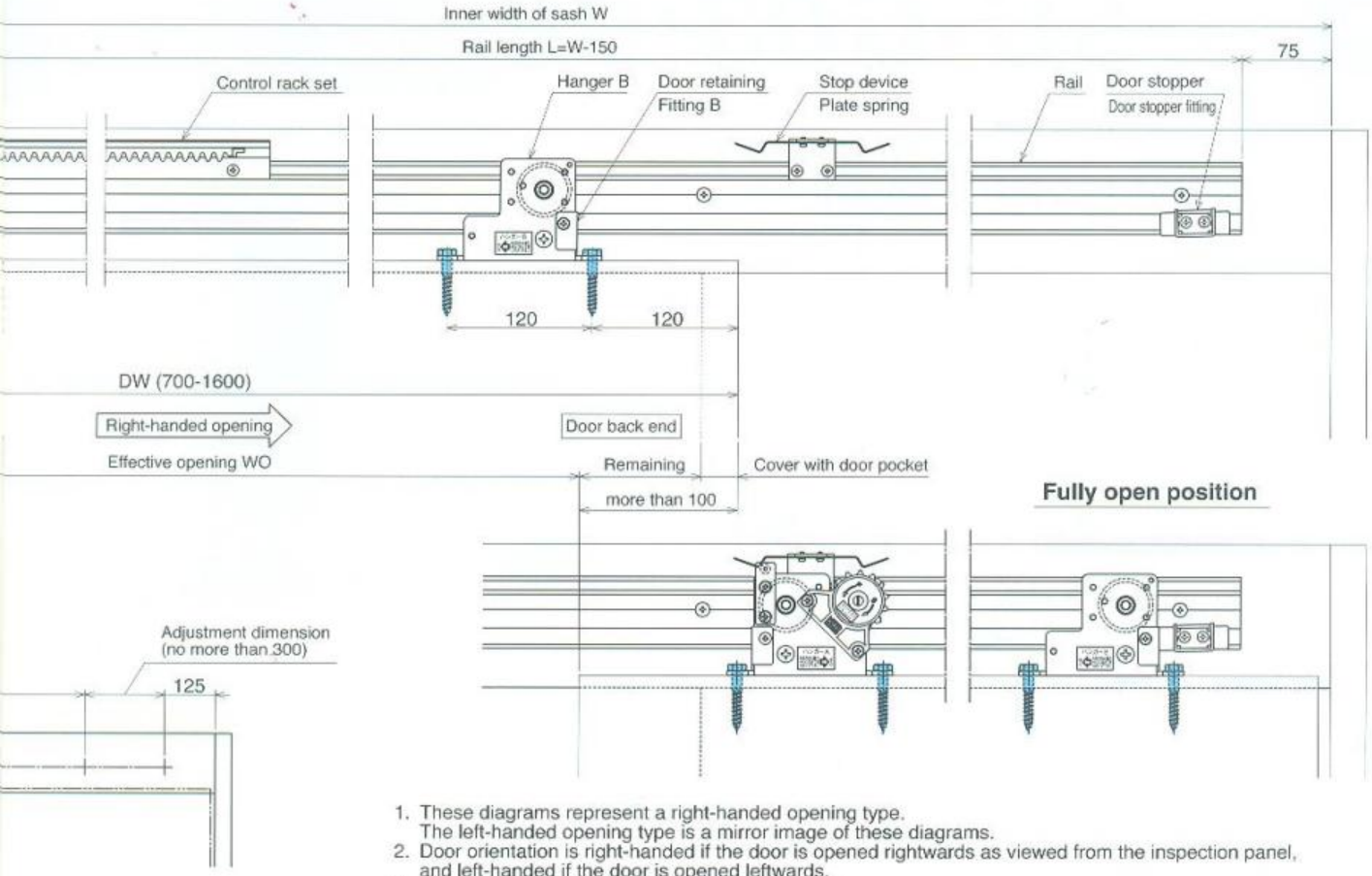

1. These diagrams represent a right-handed opening type.
   The left-handed opening type is a mirror image of these diagrams.
2. Door orientation is right-handed if the door is opened rightwards as viewed from the inspection panel, and left-handed if the door is opened leftwards.
3. The hanger is installed directly with coach screws.

NSC-CW36・48

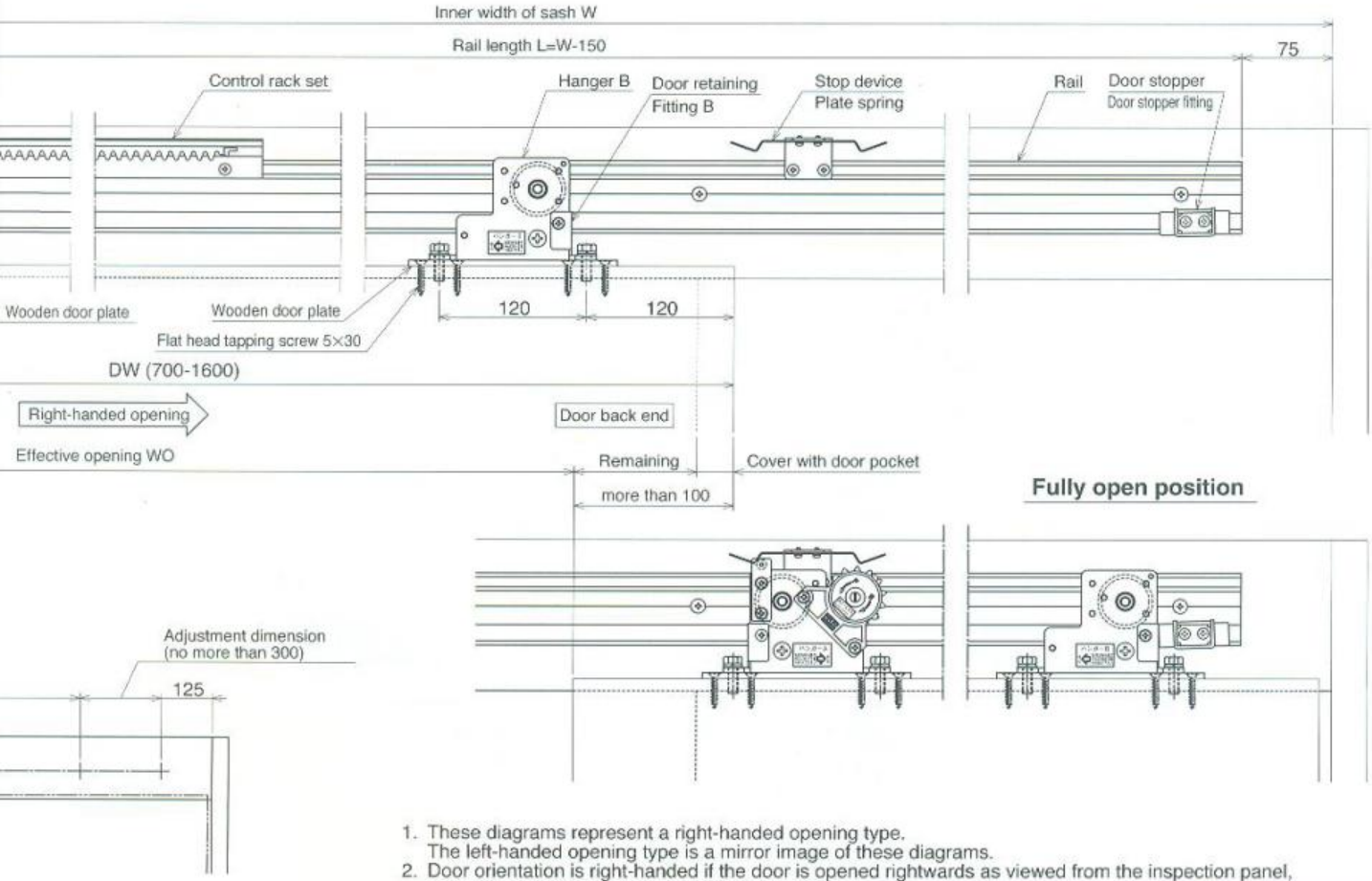

1. These diagrams represent a right-handed opening type.
   The left-handed opening type is a mirror image of these diagrams.
2. Door orientation is right-handed if the door is opened rightwards as viewed from the inspection panel, and left-handed if the door is opened leftwards.

SLIDING CLOSER SYSTEM

For steel lightweight fittings, inclined, with door weights of 10-30kg and 30-80kg

DSC-C03·08 series

Reliable, Cost Effective, Sliding Doors Closers – Simple to Use & Install

Features

- A standardized set of parts required for inclined steel lightweight fitting types. (The product comes standard with stop device, and other equipment.)
- An endless fluid friction resistance system ensures a long life.
- The product can be converted to the right- and left-handed opening types by simple operation.
- It is easy to install with a screwdriver.

Specifications

Model		DSC-C03-22	DSC-C03-31	DSC-C08-22	DSC-C08-31
Applicable doors	Weight [kg]	10-30		30-80	
	Width [mm]	700-1200	1200-1600	700-1200	1200-1600
Max. stroke [mm]		1500			
Closing drive system		Rail inclination (3.5/300)			
Controlling system		Fluid friction resistance type			
Controlling time		7-11 seconds (with a door-opening distance of 900mm)			
Initial opening force [N]		2.3-5.4		5.4-12.5	
Durability		More than 1 million open/close operations			
Rail length [m]		2.2	3.1	2.2	3.1

Part details

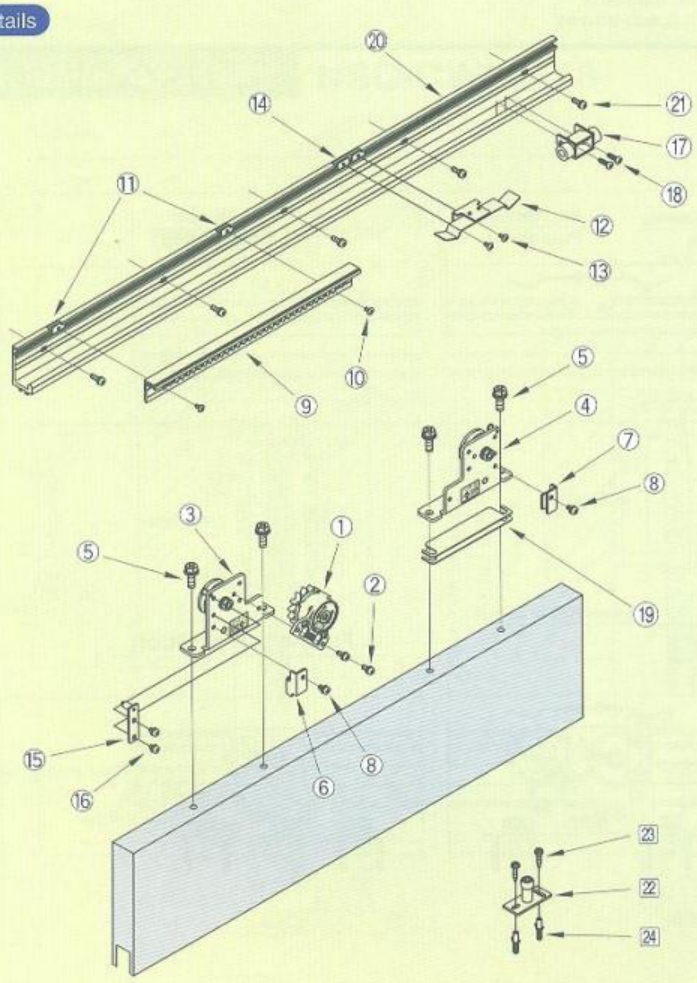

No.	Part	Q'ty	Remark
①	Control device	1	For control device
②	M5×12 pan head screw	2	
③	Hanger A	1	For hanger
④	Hanger B	1	
⑤	M8×25 hexagon head bolt	2	
	M8×30 hexagon head bolt	2	
⑥	Door retention fiting Hanger A	1	Door retention
⑦	Door retention fiting Hanger B	1	
⑧	Pan head screw M5×8	2	
⑨	Control rack set	1	For control rack set
⑩	M4×8 truss screw	2	
⑪	Plate nut	2	
⑫	Plate spring	1	For stop device
⑬	M4×8 truss screw	2	
⑭	Plate nut	2	
⑮	Stop roller	1	
⑯	M5×8 pan head screw	2	
⑰	Door stopper fitting	1	For door stopper
⑱	φ5×16 pan head tapping screw	2	
⑲	Height adjusting plate (t = 1.0, 0.5)	15+1	
⑳	Rail L = 2200 [L = 3100]	1	For rail
㉑	M5×16 truss screw	8[11]	
	φ5×30 truss tapping screw	8[11]	
22	Guide roller	1	For guide roller Option
23	φ5×25 Hexagon tapping screw	2	
	M5×12 Hexagon screw	2	
24	Curl plug	2	

DSC-C03・08

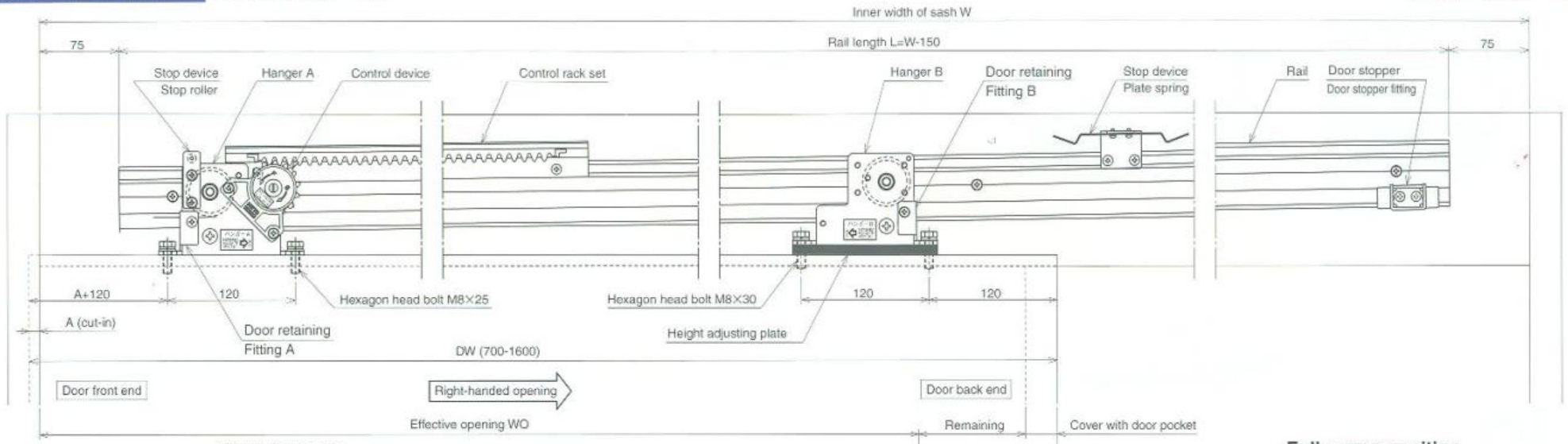

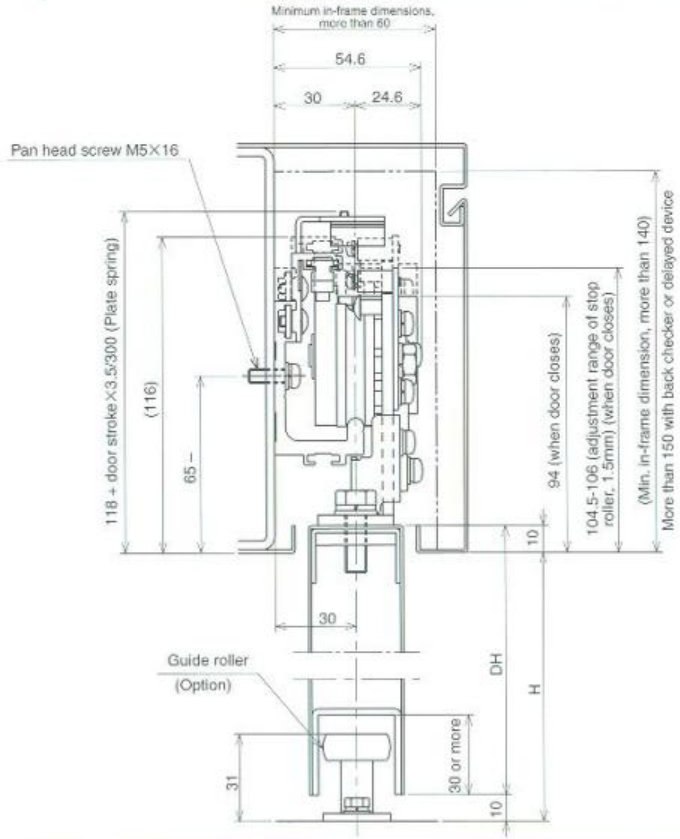

Fully open position

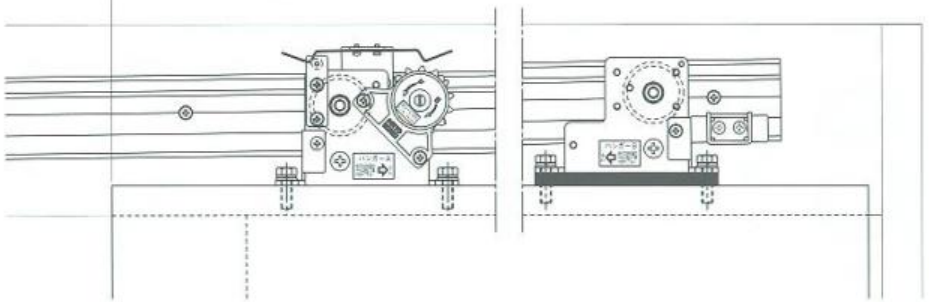

Position diagram for rail-mounting holes (as viewed from inspection panel) M5 (P=0.8)

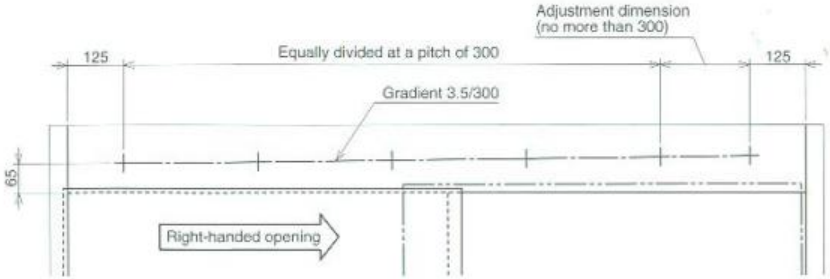

Number of height adjusting plates (reference)

Door width [mm]	No. of plates used
700-800 or less	6 pcs.
800-900 or less	7 pcs.
900-1000 or less	8 pcs.
1000-1100 or less	9 pcs.
1100-1200 or less	10 pcs.
1200-1300 or less	12 pcs.
1300-1400 or less	13 pcs.
1400-1500 or less	14 pcs.
1500-1600 or less	15 pcs.

1. These diagrams represent a right-handed opening type.
   The left-handed opening type is a mirror image of these diagrams.
2. Door orientation is right-handed if the door is opened rightwards as viewed from the inspection panel, and left-handed if the door is opened leftwards.

SLIDING CLOSER SYSTEM

For steel lightweight fittings, inclined, with door weights of 80～150kg

DSC-C015 series

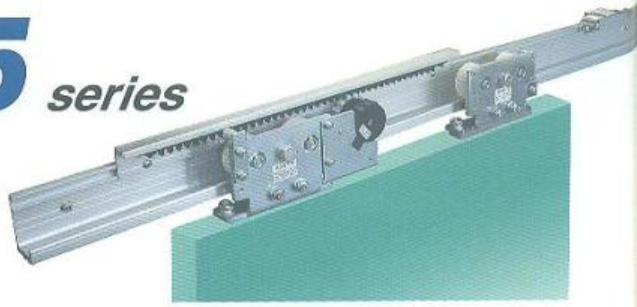

Reliable, Cost Effective, Sliding Doors Closers – Simple to Use & Install

Features

- A standardized set of parts required for inclined steel lightweight fitting types. (The product comes standard with stop device, and other equipment.)
- An endless fluid friction resistance system ensures a long life.
- The product can be converted to the right- and left-handed opening types by simple operation.
- It is easy to install with a screwdriver.

Specifications

Model		Inclined type	
		DSC-C015-22	DSC-C015-31
Applicable doors	Weight (kg)	80～150	
	Width (mm)	700～1200	1200～1600
Max. stroke (mm)		1500	
Closing drive system		Rail inclination(3.5/300)	
Controlling system		Fluid friction resistance type	
Controlling time		7～11seconds (with a door-opening distance of 900mm)	
Initial opening force (N)		12.5～24.0	
Durability		More than 1 million open/close operations	
Rail length (m)		2.2	3.1

Part details

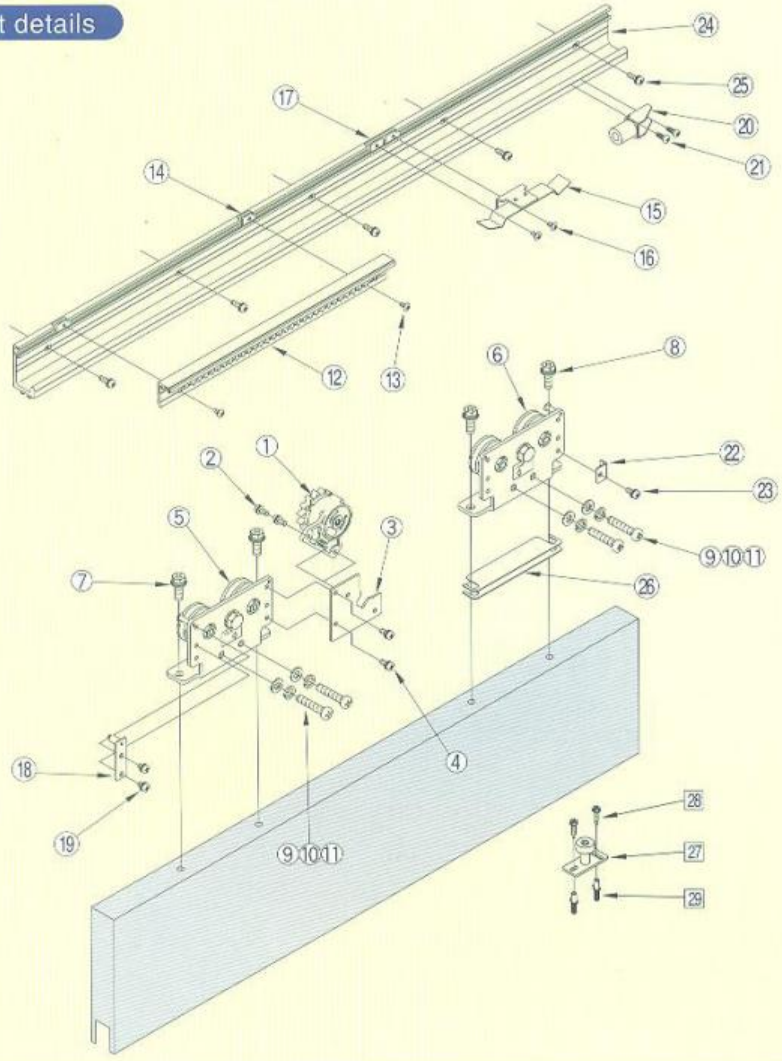

No.	Part	Q'ty	Remark
①	Control device	1	For control device
②	M5×12 pan head screw	2	
③	Control device bracket	1	
④	M5×12 pan head screw	2	
⑤	HangerA	1	For hanger
⑥	HangerB	1	
⑦	M8×25 hexagon head bolt	2	
⑧	M8×30 hexagon head bolt	2	
⑨	M8×40 pan head screw	4	For door retention
⑩	Spring washer M8	4	
⑪	Plean washer M8	4	
⑫	Control rack set	1	For control rack set
⑬	M4×8 truss screw	2	
⑭	Plate nut	2	
⑮	Plate spring	1	For stop device
⑯	M4×8 truss screw	2	
⑰	Plate nut	2	
⑱	Stop roller	1	
⑲	M5×8 pan head screw	2	
⑳	Door stopper fitting	1	For door stopper
㉑	φ16×19 pan head drill screw	2	
㉒	Door stopper plate	1	
㉓	M5×8 pan head screw	1	
㉔	Rail L=2200 [L=3100]	1	For Rail
㉕	M5×16 truss screw	8[11]	
	φ5×30 truss tapping screw	8[11]	
㉖	Height adjusting plate (t=1.0.0.5)	15+1	
㉗	Guide roller	1	For guide roller Option
㉘	φ5×25 Hexagon tapping screw	2	
	M5×12 Hexagon screw	2	
㉙	Curl plug	2	

Installation diagrams DSC-C015 series inclined

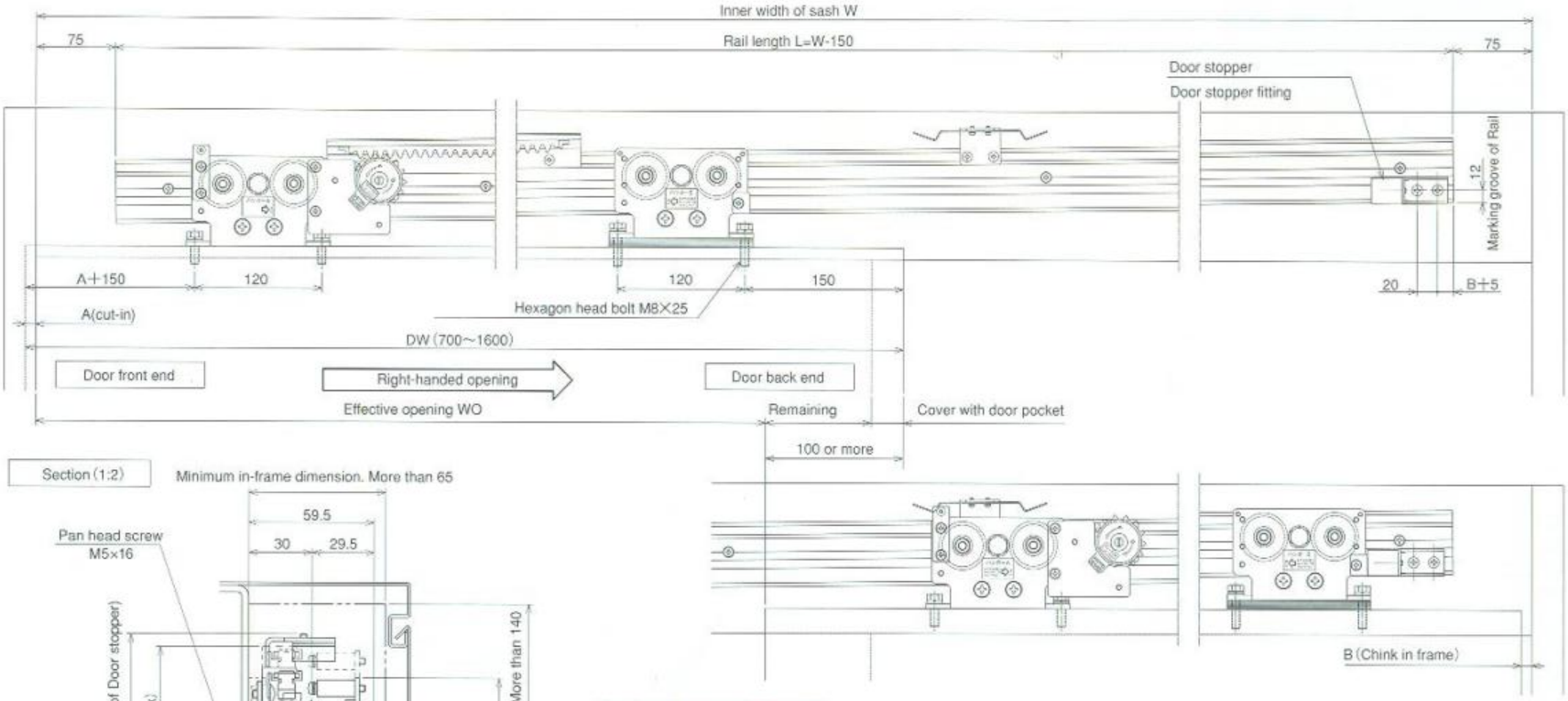

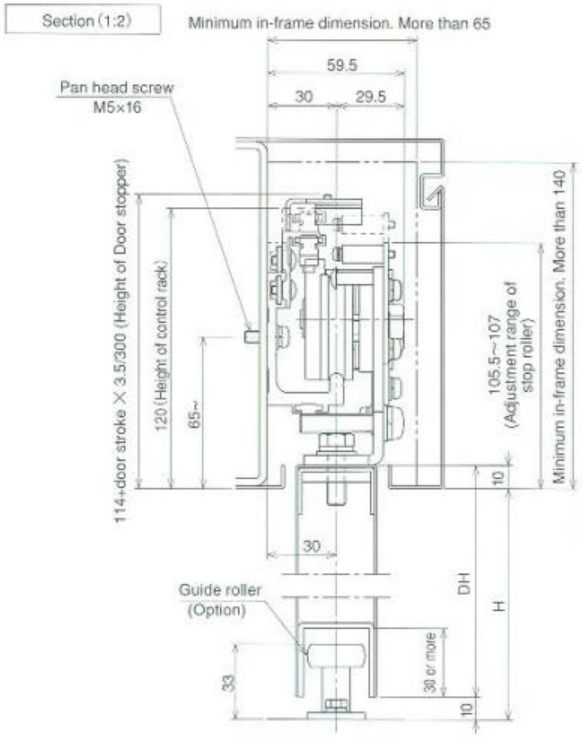

Number of height adjusting plate

Door with DW [mm]	No. of plate used
700~ 800 or less	6 pc
800~ 900 or less	7 pc
900~1000 or less	8 pc
1000~1100 or less	9 pc
1100~1200 or less	10 pc
1200~1300 or less	12 pc
1300~1400 or less	13 pc
1400~1500 or less	14 pc
1500~1600 or less	15 pc

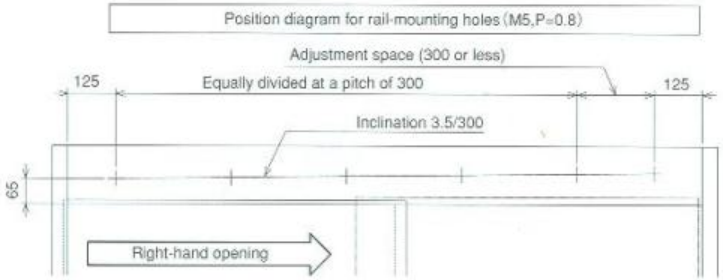

1. These diagrams represent a right-hand opening type.
   The left-handed opening type is a mirror image of these diagrams.
2. Door orientation is right-handed if the door is opened rightwards as viewed from the maintenance panel and left-handed if the door is opened leftwards.

SLIDING CLOSER SYSTEM

For steel lightweight fittings, horizontal, with door weights of 10-30kg, 30-60kg and 60-80kg

NSC-C23·36·48 series

Reliable, Cost Effective, Sliding Doors Closers – Simple to Use & Install

Features

- A standardized set of parts required for horizontal steel lightweight fitting types. (The product comes standard with a stop device, and other equipment.)
- An endless fluid friction resistance system ensures a long life.
- The product can be converted to the right- and left-handed opening types by simple operation.
- It is easy to install with a screwdriver.

Specifications

Model		NSC-C23-22	NSC-C23-31	NSC-C36-22	NSC-C36-31	NSC-C48-22	NSC-C48-31
Applicable doors	Weight [kg]	10-30		30-60		60-80	
	Width [mm]	700-1200	1200-1600	700-1200	1200-1600	700-1200	1200-1600
Max. stroke [mm]		1500					
Closing drive system		Spiral spring type					
Controlling system		Fluid friction resistance type					
Controlling time		7-11 seconds (with a door-opening distance of 900mm)					
Initial opening force [N]		3.5-4.6		4.7-6.9		7.0-8.0	
Durability		More than 1 million open/close operations					
Pull spring		PS-02		PS-03		PS-04	
Rail length [m]		2.2	3.1	2.2	3.1	2.2	3.1

Part details

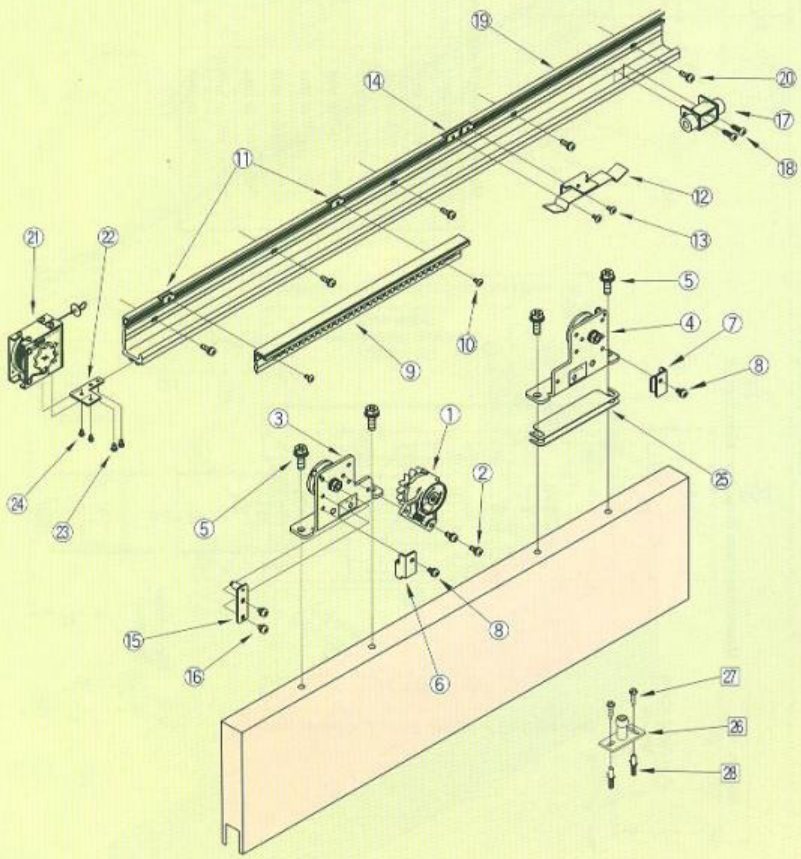

No.	Part	Q'ty	Remark
①	Control device	1	For control device
②	M5×12 pan head screw	2	
③	Hanger A	1	For hanger
④	Hanger B	1	
⑤	M8×25 hexagon head bolt	4	
⑥	Door retention fiting Hanger A	1	Door retention
⑦	Door retention fiting Hanger B	1	
⑧	Pan head screw M5 × 8	2	
⑨	Control rack set	1	For control rack set
⑩	M4×8 truss screw	2	
⑪	Plate nut	2	
⑫	Plate spring	1	For stop device
⑬	M4×8 truss screw	2	
⑭	Plate nut	2	
⑮	Stop roller	1	
⑯	M5×8 pan head screw	2	
⑰	Door stopper fitting	1	For door stopper
⑱	φ5×16 pan head tapping screw	2	
⑲	Rail L = 2200 [L = 3100]	1	For rail
⑳	M5×16 truss screw	8[11]	
	φ5×30 truss tapping screw	8[11]	
㉑	Pull spring	1	For pull spring
㉒	Pull spring fitting	1	
㉓	M4×5 truss screw	2	
㉔	M3×8 truss screw	2	
㉕	Height adjusting plate (t=1.0)	4	
26	Guide roller	1	For guide roller Option
27	φ5×25 Hexagon tapping screw	2	
	M5×12 Hexagon screw	2	
28	Curl plug	2	

NSC-C23 • 36 • 48

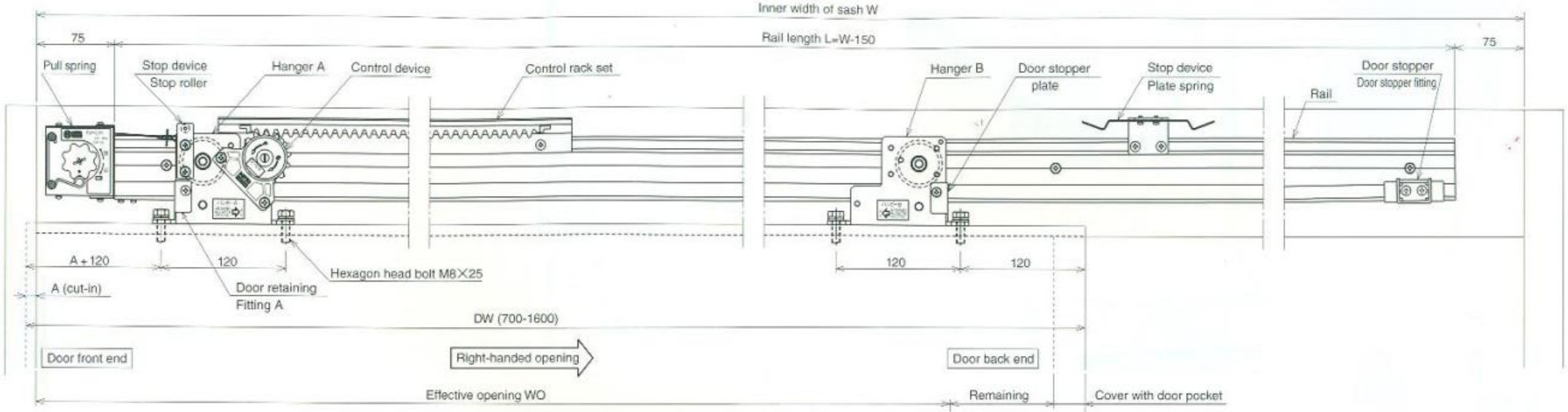

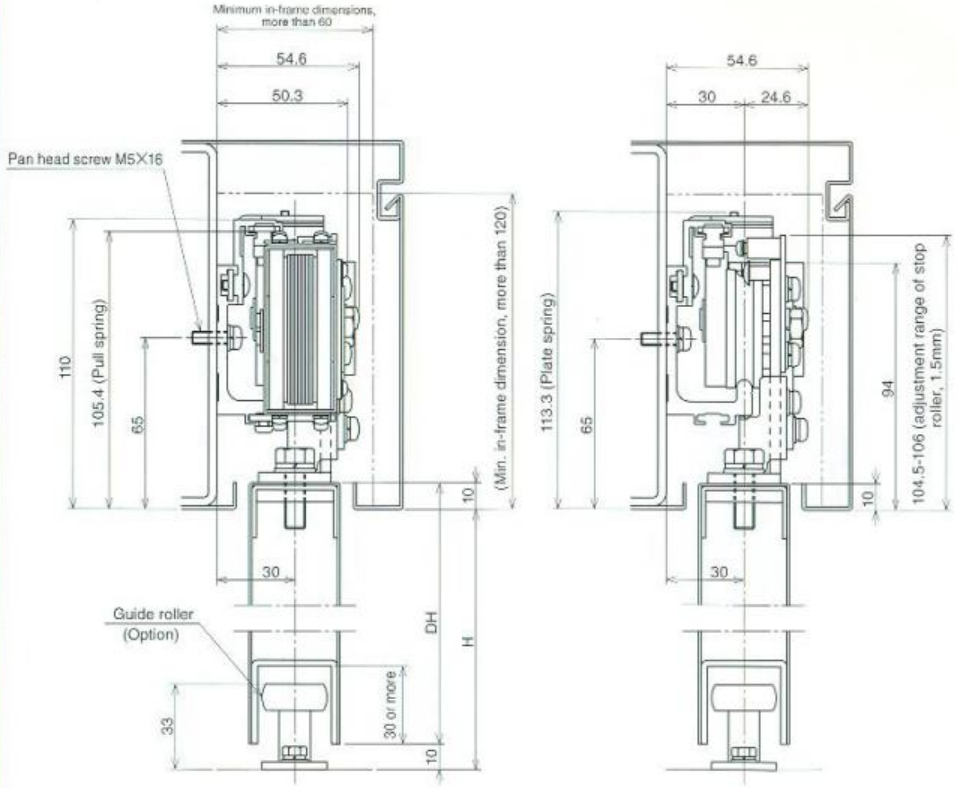

Fully open position

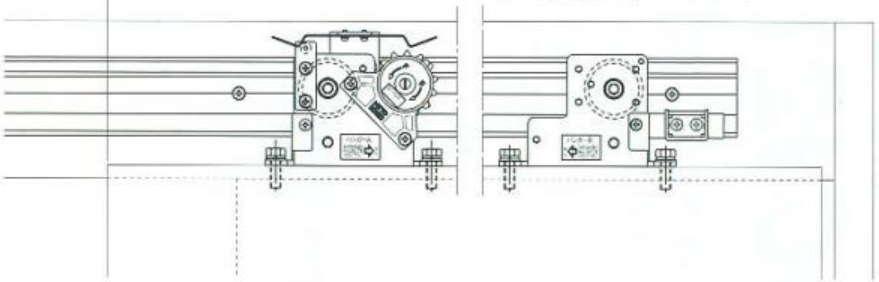

Position diagram for rail-mounting holes (as viewed from inspection panel) M5 (P=0.8)

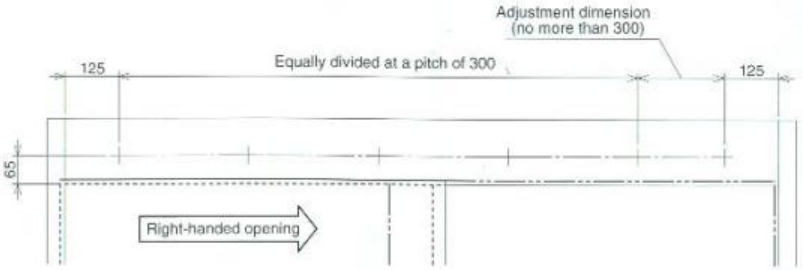

1. These diagrams represent a right-handed opening type.
   The left-handed opening type is a mirror image of these diagrams.
2. Door orientation is right-handed if the door is opened rightwards as viewed from the inspection panel, and left-handed if the door is opened leftwards.

SLIDING CLOSER SYSTEM

For steel lightweight fittings, horizontal, with door weights of 80～150kg

NSC-C1215 series

Reliable, Cost Effective, Sliding Doors Closers – Simple to Use & Install

Features

- A standardized set of parts required for horizontal steel lightweight fitting types. (The product comes standard with a stop device, and other equipment.)
- An endless fluid friction resistance system ensures a long life.
- The product can be converted to the right- and left-handed opening types by simple operation.
- It is easy to install with a single screwdriver.

Specifications

Model		Horizontal type	
		NSC-C1215-22	NSC-C1215-31
Applicable doors	Weight (kg)	80～150	
	Width (mm)	700～1200	1200～1600
Max. stroke (mm)		1500	
Closing drive system		Spiral spring type	
Controlling system		Fluid friction resistance type	
Controlling time		7～11seconds (with a door-opening distance of 900mm)	
Initial opening force (N)		13.8～19.6	
Durability		More than 1 million open/close operations	
Pull spring		PS-12	
Rail length (m)		2.2	3.1

Part details

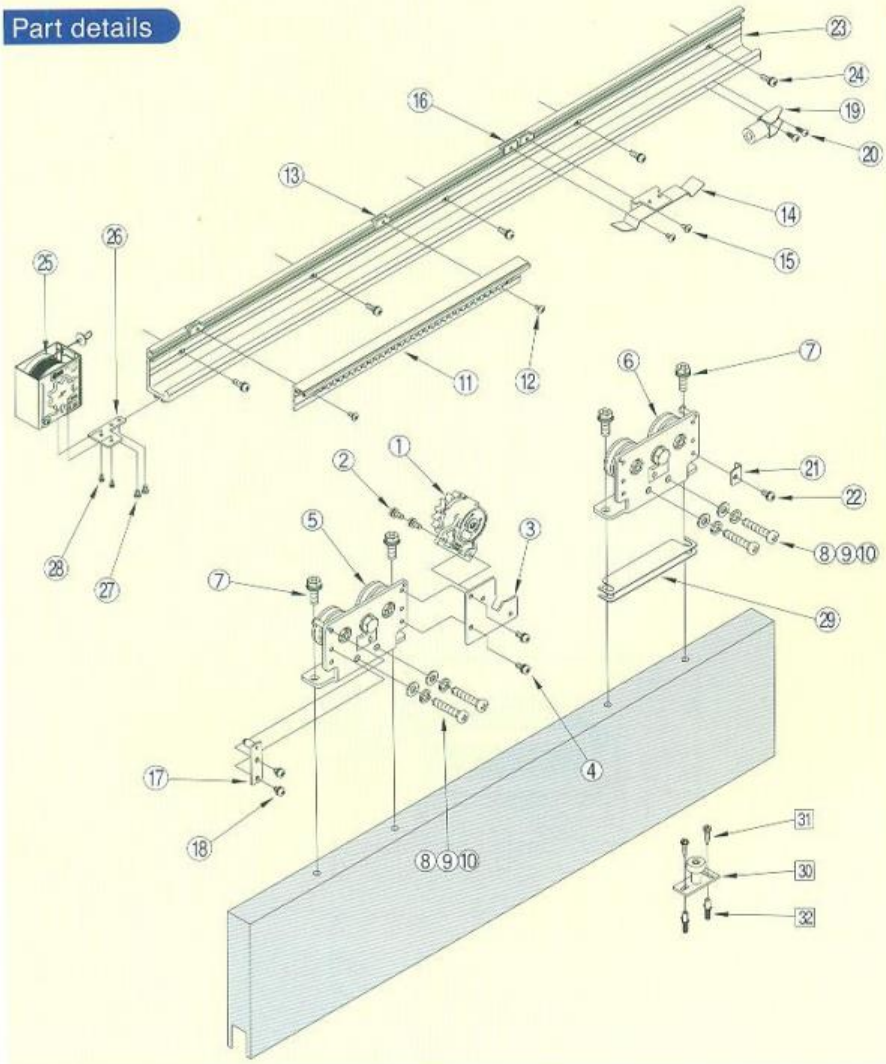

No.	Part	Q'ty	Remark
①	Control device	1	For control device
②	M5×12 pan head screw	2	
③	Control device bracket	1	
④	M5×12 pan head screw	2	
⑤	HangerA	1	For hanger
⑥	HangerB	1	
⑦	M8×25 hexagon head bolt	4	
⑧	M8×40 pan head screw	4	For door retention
⑨	Spring washer M 8	4	
⑩	Plean washer M8	4	
⑪	Control rack set	1	For control rack set
⑫	M4×8 truss screw	2	
⑬	Plate nut	2	
⑭	Plate spring	1	For stop device
⑮	M4×8 truss screw	2	
⑯	Plate nut	2	
⑰	Stop roller	1	
⑱	M5×8 pan head screw	2	
⑲	Door stopper fitting	1	For door stopper
⑳	ϕ6×19 pan head drill screw	2	
㉑	Door stopper bearing plate	1	
㉒	M5×8 pan head screw	1	
㉓	Rail L=2200 [L=3100]	1	For rail
㉔	M5×16 truss screw	8[11]	
	ϕ5×30 truss tapping screw	8[11]	
㉕	Pull spring	1	For pull spring
㉖	Pull spring fitting	1	
㉗	M4×5 pan head screw	2	
㉘	M3×8 pan head screw	2	
㉙	Height adjusting plate (t=1.0)	4	
30	Guide roller	1	For guide roller Option
31	ϕ5×25 Hexagon tapping screw	2	
	M5×12 Hexagon screw	2	
32	Curl plug	2	

Installation diagrams NSC-C1215 series horizontal

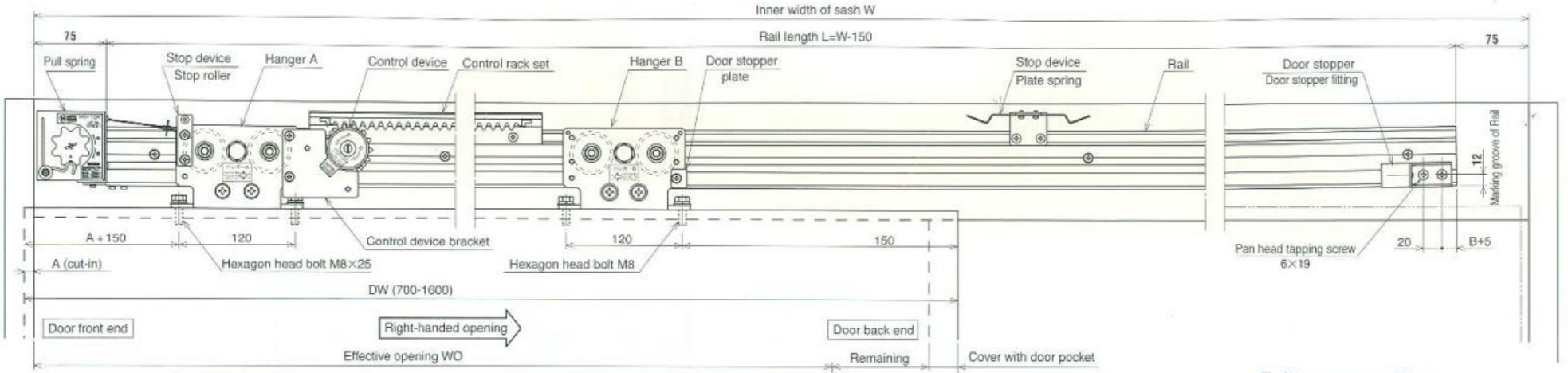

Fully open position

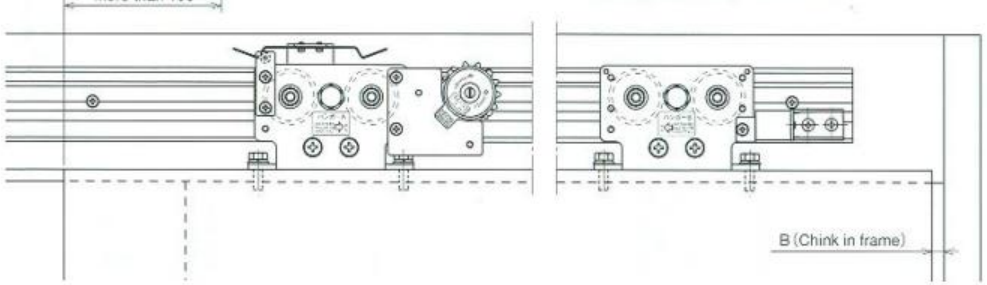

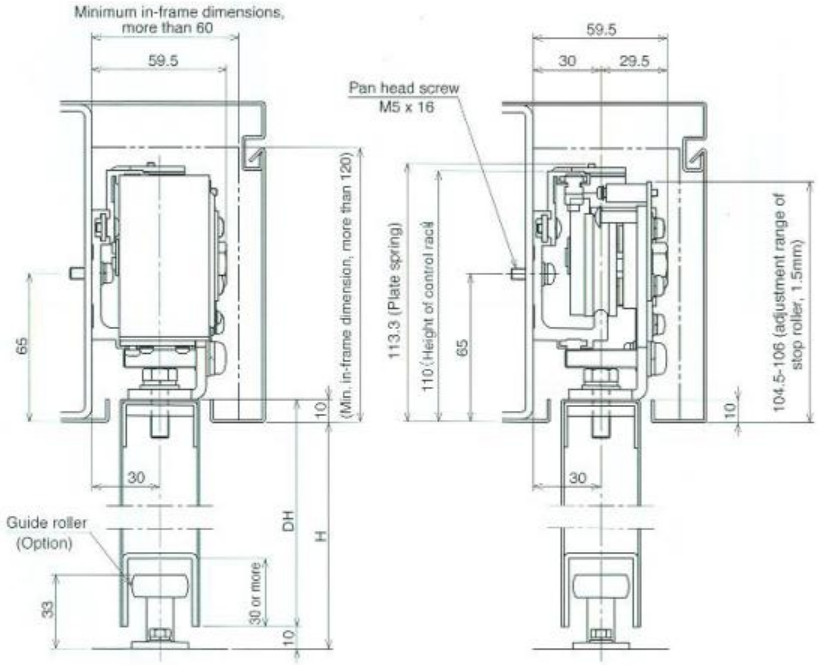

Position diagram for rail-mounting holes (as viewed from inspection panel) M5 (P=0.8)

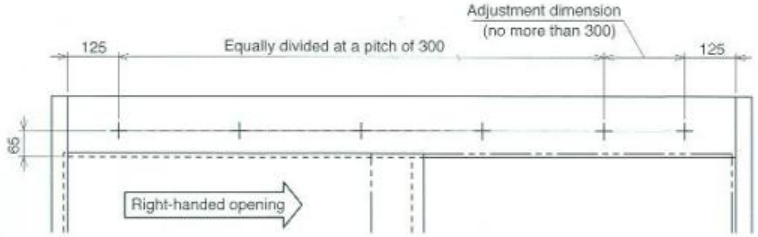

1. These diagrams represent a right-handed opening type.
   The left-handed opening type is a mirror image of these diagrams.
2. Door orientation is right-handed if the door is opened rightwards as viewed from the inspection panel, and left-handed if the door is opened leftwards.

Option Single action Double sliding system, SC-2S

Installation diagrams

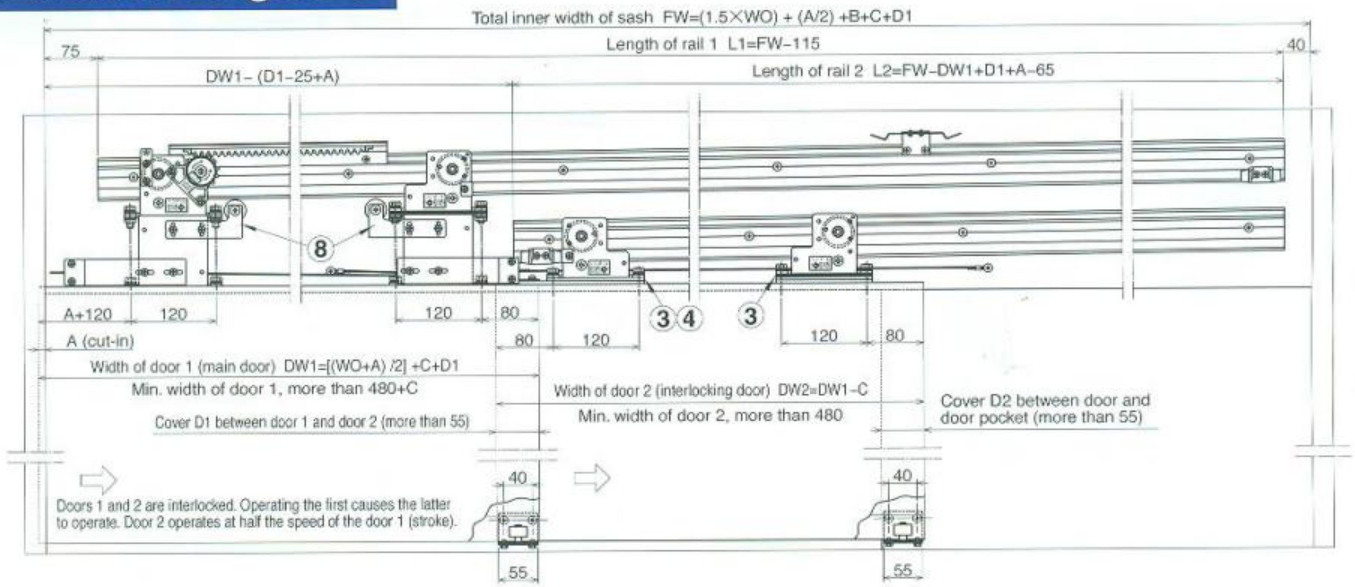

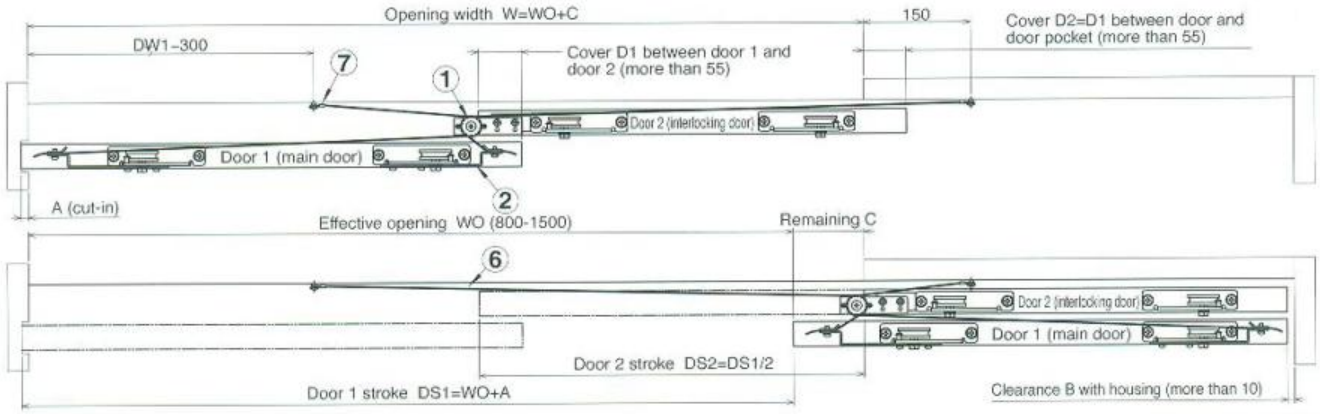

① Pulley fitting

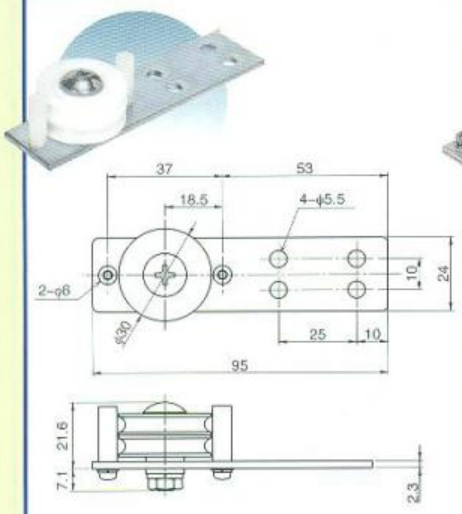

Fitting: Steel
Pulley: Polyacetal

② Wire fitting

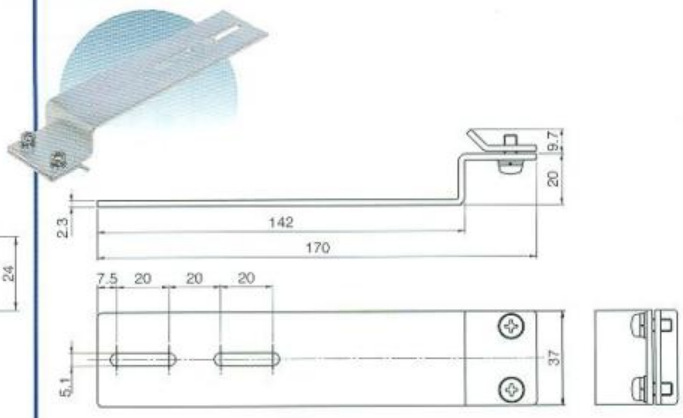

Fitting: Steel

③ Liner S

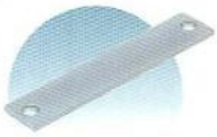

Liner: Steel

④ Liner L

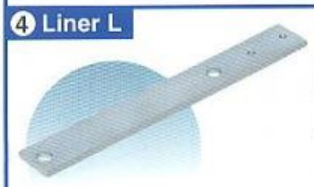

Liner: Steel

⑦ Wire fastener on frame

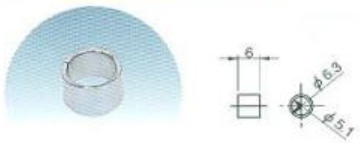

Fitting: Steel

⑧ Rebound-preventive fitting

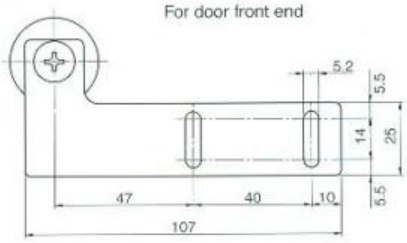

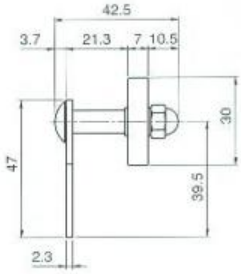

Fitting: Steel
Pulley: Polyacetal

Position diagram of holes on the frame (as viewed from the inspection panel)

*When handling a steel frame, tap M5 holes (P = 0.8).

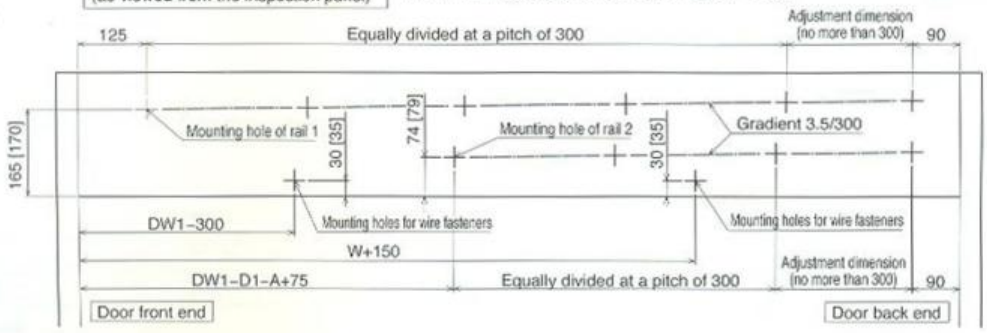

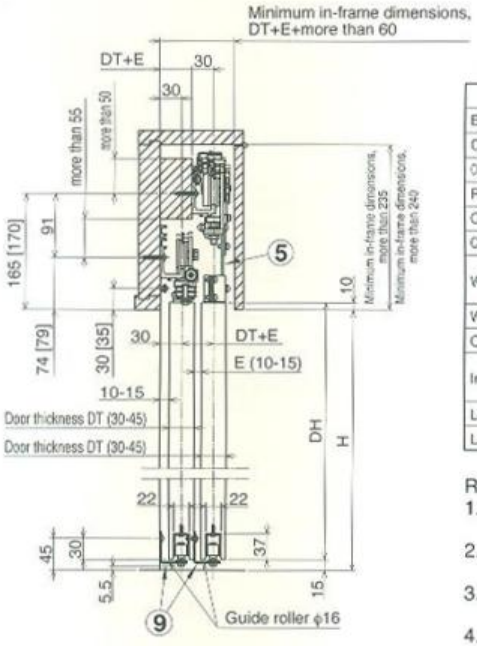

Formulae for calculating main dimensions

Item	Code	Formula
Effective opening	WO	Specify (800-1,500)
Cut-in of door front end	A	Specify
Clearance between housing and door when door is open	B	Specify (more than 10)
Remaining	C	Specify
Cover between doors 1 and 2	D1	Specify (more than 55)
Cover between door 2 and door pocket	D2	D2=D1 (more than 55)
Width of door 1	DW1	$\frac{WO+A}{2}$ +C+D1
Width of door 2	DW2	DW1-C (more than 480)
Opening width	W	WO+C
Inner width of sash	FW	(1.5[WO)+ $\frac{A}{2}$ +B+C+D1
Length of rail 1	L1	FW-115
Length of rail 2	L2	FW-DW1+D1+A-65

Constituents of single action Double sliding system

Item	Part	Q'ty of 1 set	Remark
①	Pulley fitting	1	
②	Wire fastener	2	
③	Liner S	3	
④	Liner L	1	
⑤	Hanger base	2	
⑥	Wire rope	2	
⑦	Wire fastener on frame	2	
⑧	Rebound-preventive fitting	2	1pc. each for door front end and for door back end
⑨	Guide roller AJ	2	4 types, D = 16, 25, 30, 35
⑩	Hexagon head bolt (M8×25)	4	For installing hanger bracket and hanger
⑪	Hexagon head nut (M8)	4	For installing hanger bracket and hanger
⑫	Flat washer (for M8)	4	For installing hanger bracket and hanger
⑬	Pan head screw (M5×12)	8	Wire fitting, for installing rebound-preventive fitting
⑭	Hexagon head screw(M5×8)	2	For installing pulley fitting
⑮	Truss screw (M5×12)	2	For installing wire fitting on frame
⑯	Truss screw (M5×12 SUS)	2	For installing guide roller

Remarks

1. These diagrams represent a right-handed opening type. The left-handed opening type is a mirror image of these diagrams.
2. The dimensions in [ ] are used when the wooden door plate is used (DSC-CW08 and NSC-CW36/48).
3. These diagrams show how an inclined DSC is typically installed. The inclined and horizontal types incorporate identical parts.
4. This system is required SC-2S, Standard set, Hanger(A.B), Rail and Door stopper.

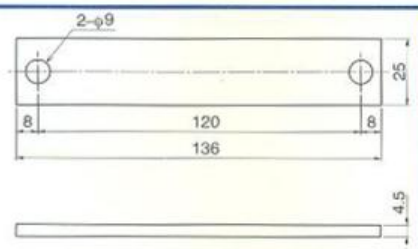

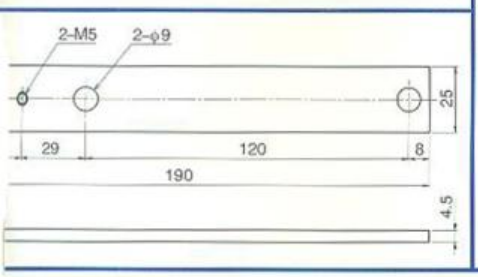

⑤ Hanger base

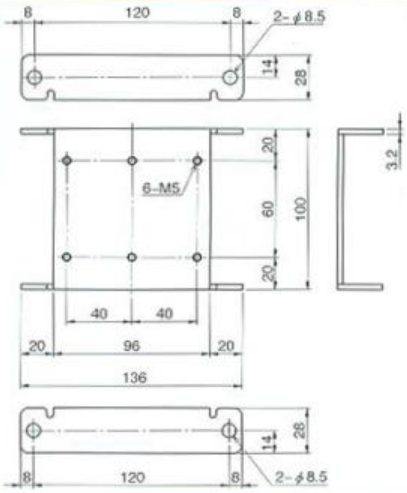

Base: Steel

⑥ Wire rope

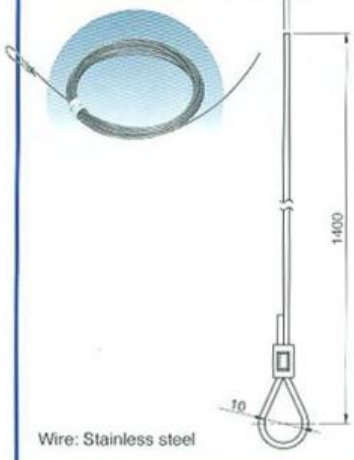

Wire: Stainless steel

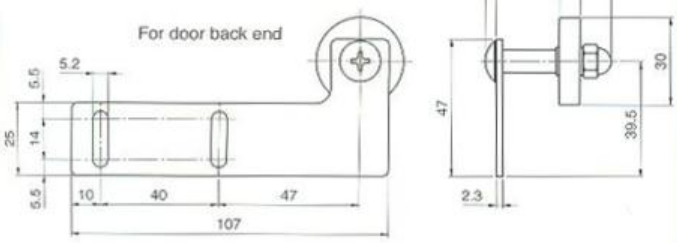

⑨ Guide roller AJ

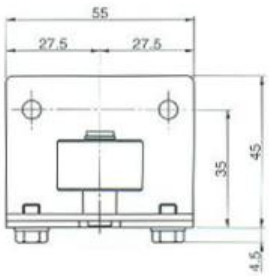

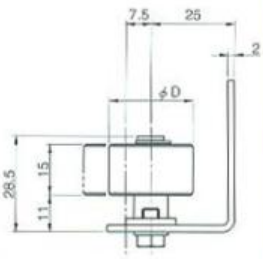

Fitting: Steel
Roller: Polyacetal

*4 types, φD = 16, 25, 30, 35

Option Bi-Parting system, SC-W

Installation diagrams

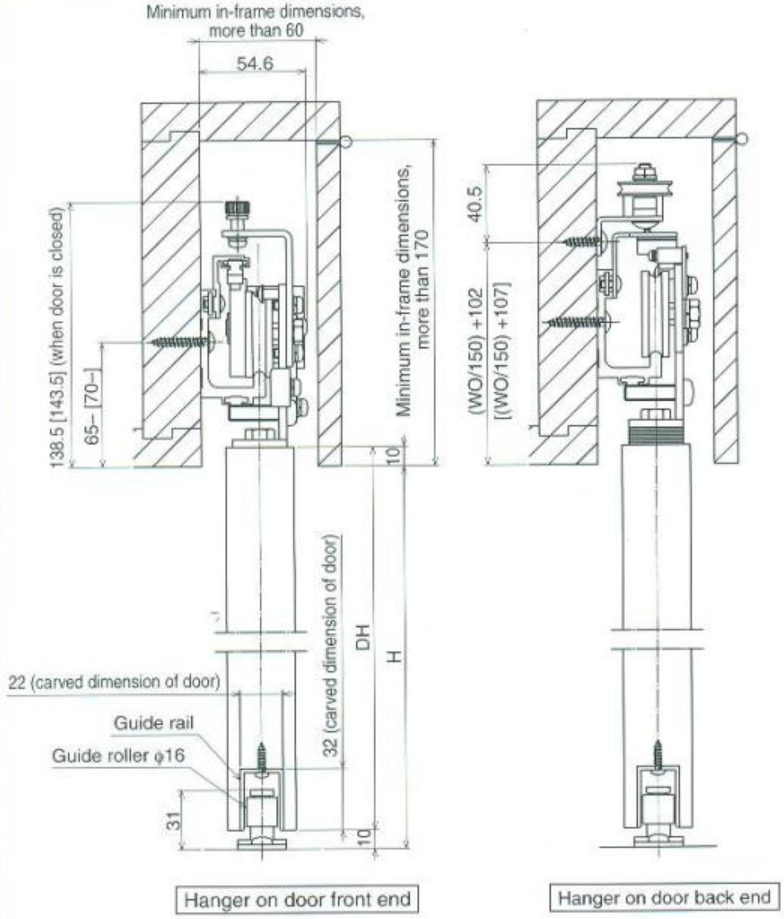

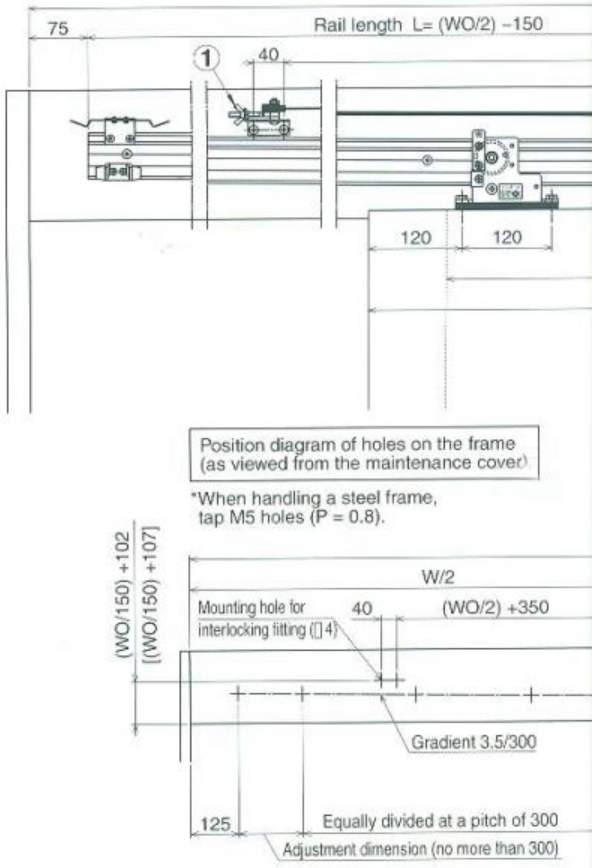

❶ Adjustment fitting L

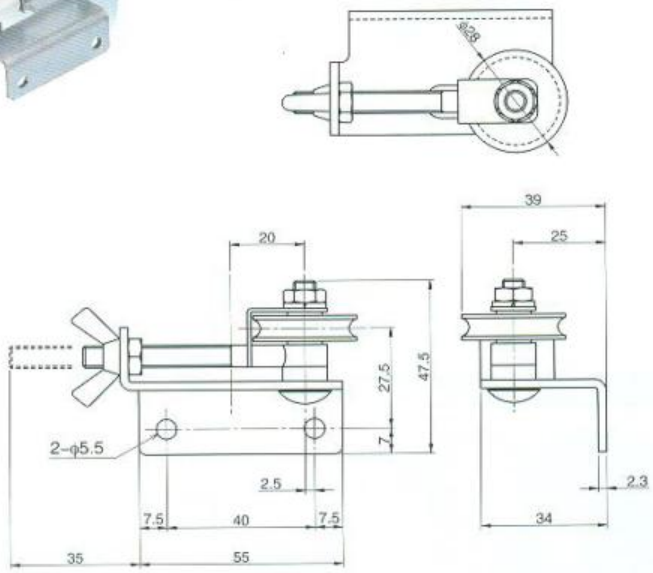

❷ Adjustment fitting R

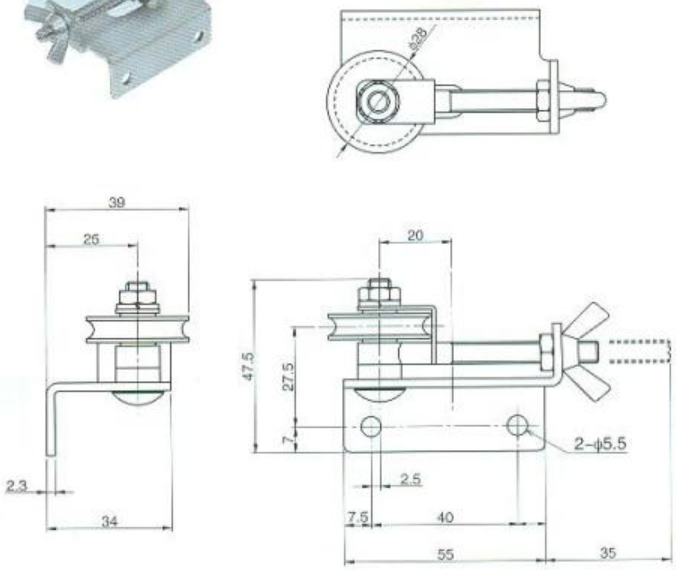

Fitting: Steel
Roller: Polyacetal

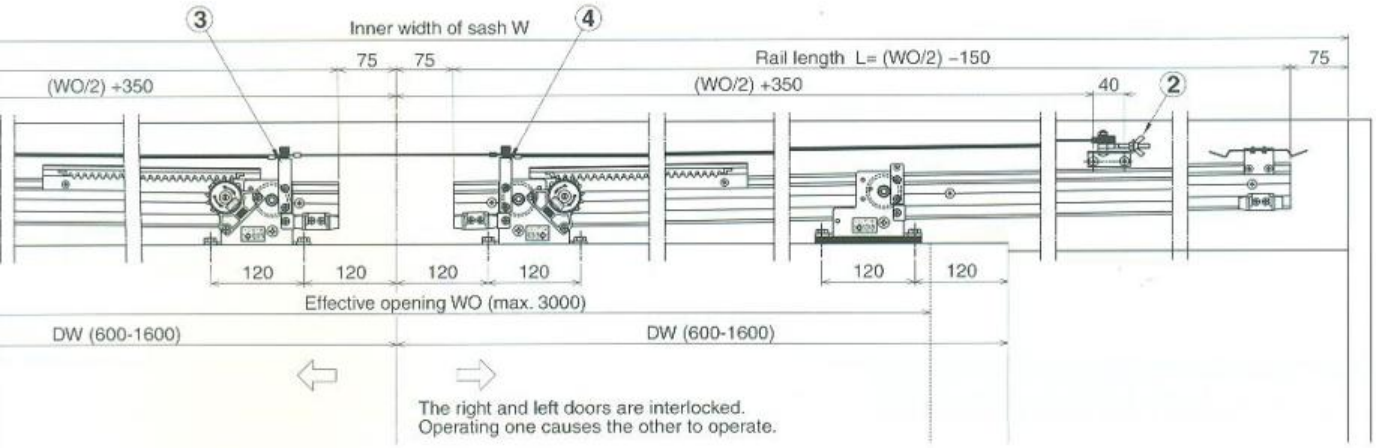

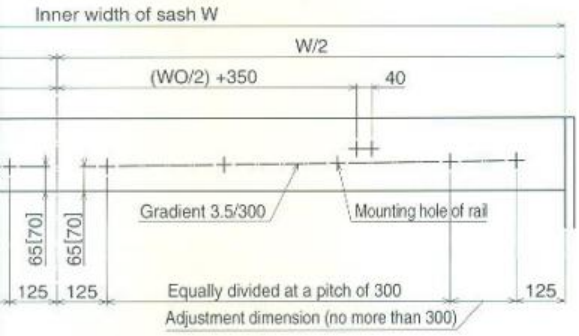

Constituents of Bi-Parting system

Item	Part	Q'ty of 1 set	Remark
1	Adjustment fitting L	1	
2	Adjustment fitting R	1	
3	Angle L	1	
4	Angle R	1	
5	Wire rope	2	
6	Pan head screw (M5×12)	4	For installing adjustment fitting
7	Aluminum sleeve	2	Wire rope for crimping

Remarks
1. These diagrams represent a right-handed opening type. The left-handed opening type is a mirror image of these diagrams.
2. The dimensions in [ ] are used when the wooden door plate is used (DSC-CW08 and NSC-CW36/48).
3. These diagrams show how an inclined DSC is typically installed. The inclined and horizontal types incorporate identical parts.
4. This system is required SC-W, two set of standard model and two set of door stopper.

③ Angle L

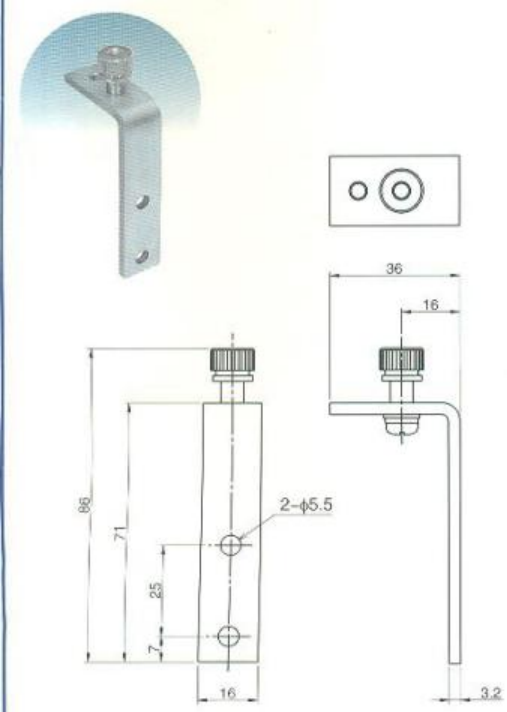

④ Angle R

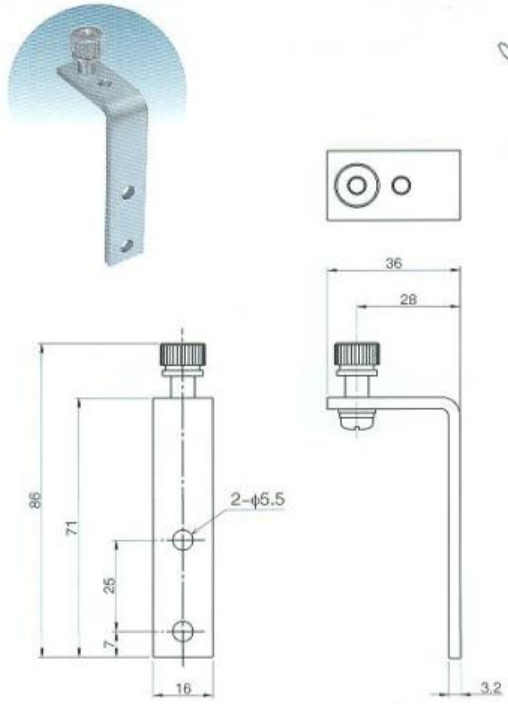

Angle: Steel

⑤ Wire rope

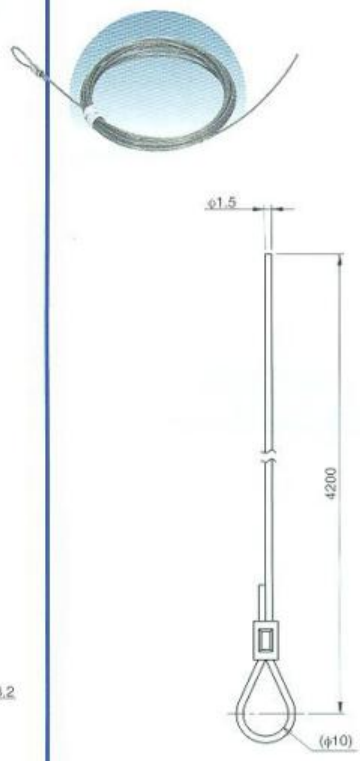

Wire: Stainless steel

Option Free stopper, Back checker, Delayed device, Maintenance cover

Installation diagrams of free stopper

(The door can be stopped anywhere by opening and releasing it.)

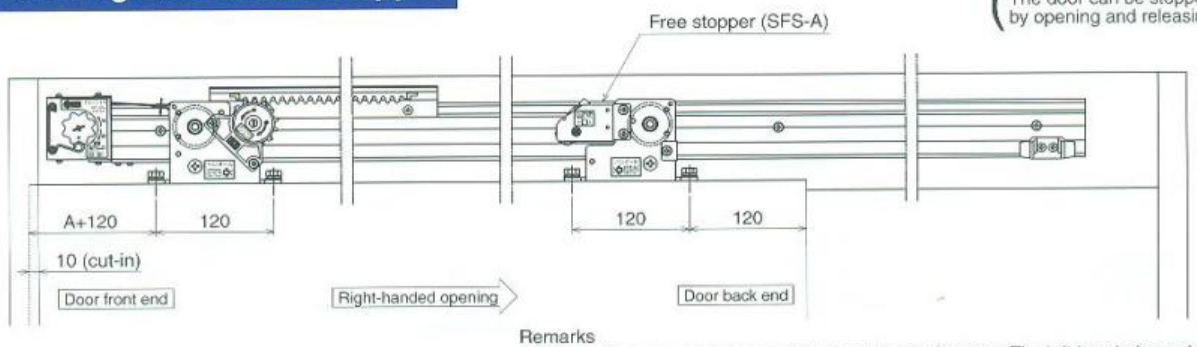

Remarks
1. These diagrams represent a right-handed opening type. The left-handed opening type is a mirror image of these diagrams.
2. This diagram shows how a model of the horizontal NSC-C series is typically installed.
3. Models of the inclined DSC-C series are installed in the same way as in this diagram.

Installation diagrams of back checker

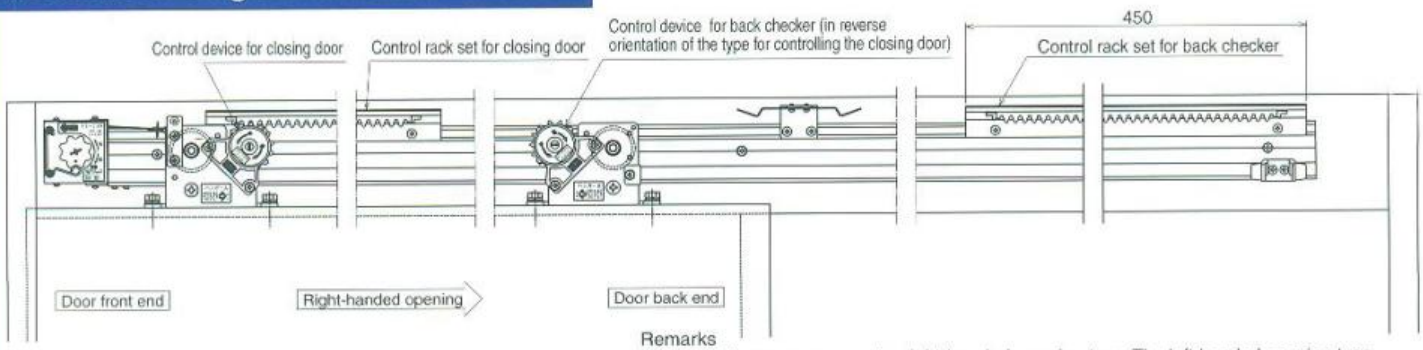

Remarks
1. These diagrams represent a right-handed opening type. The left-handed opening type is a mirror image of these diagrams.
2. This diagram shows how a model of the horizontal NSC-C series is typically installed.
3. Models of the inclined DSC-C series are installed in the same way as in this diagram.

Installation diagrams of delayed device

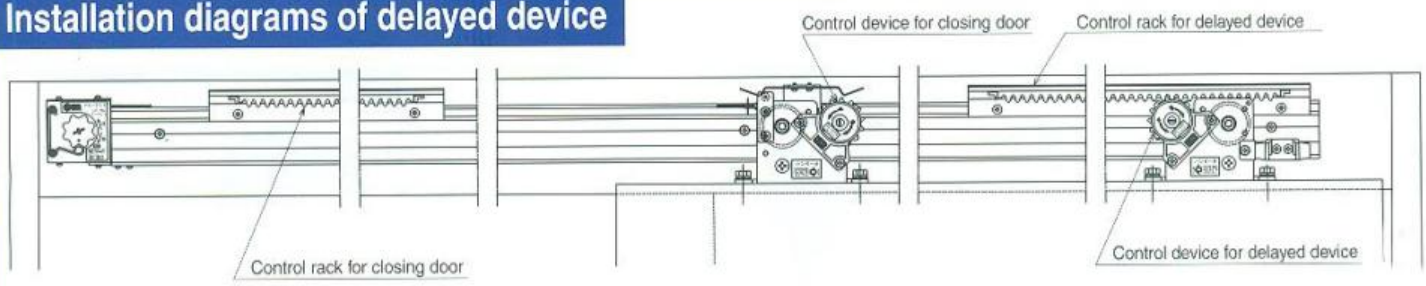

Remarks
1. These diagrams represent a right-handed opening type. The left-handed opening type is a mirror image of these diagrams.
2. This diagram shows how a model of the horizontal NSC-C series is typically installed.
3. Models of the inclined DSC-C series are installed in a similar way.
4. A back checker or a delayed device cannot be combined with a free stopper.

External diagrams of maintenance cover and side cover

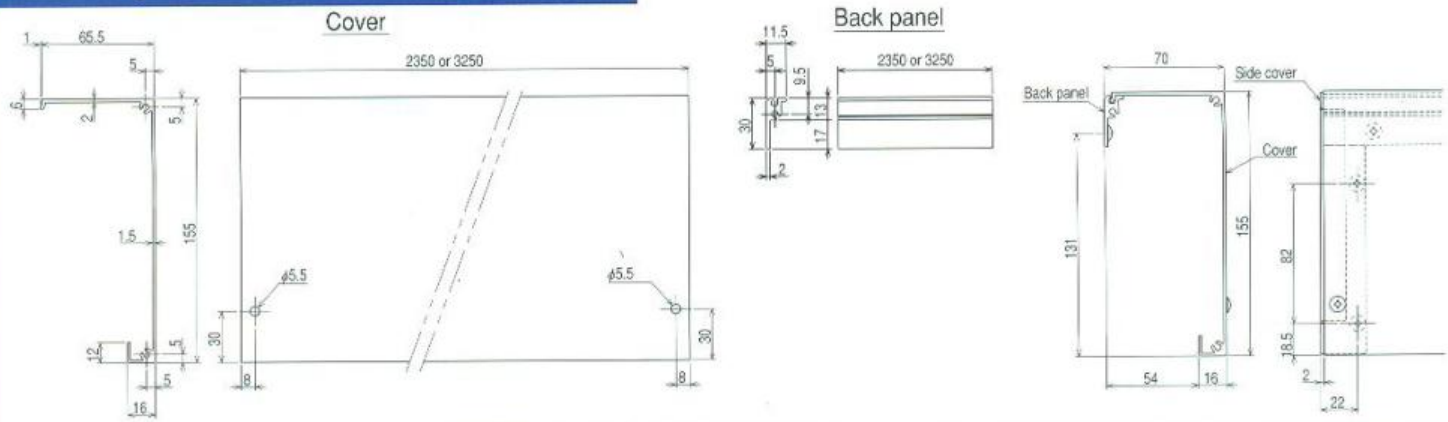

Free stopper (installing the hanger on the door back end)

Free stopper

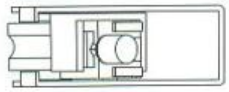

Diagram of fittings installed

For right-handed opening type

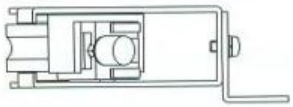

For left-handed opening type

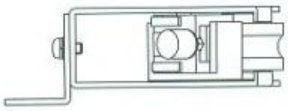

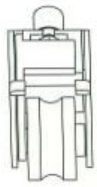

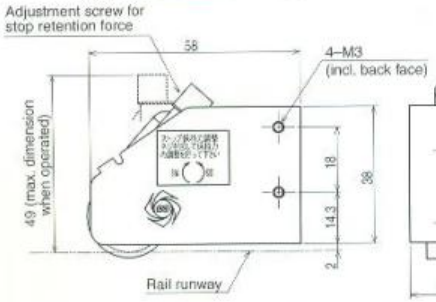

Fitting for installing free stopper

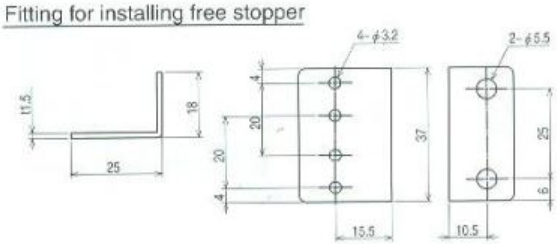

Control device for back check (installing the hanger on the door back end)

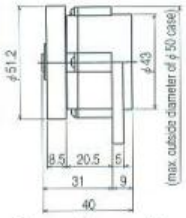

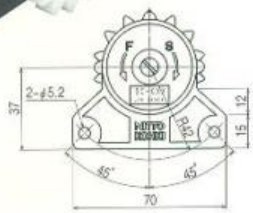

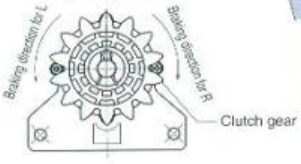

Reverse orientation of the control device for the closing door.

Control rack set for back check (installing the door back end)

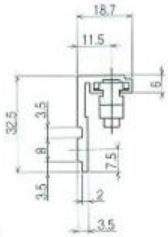

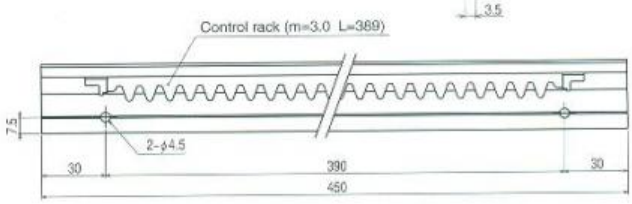

Control device for the delayed device (installing the hanger on the door back end)

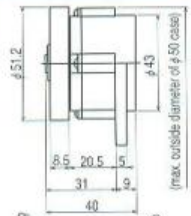

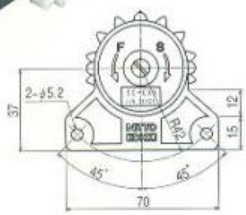

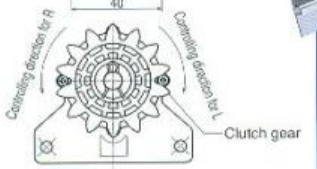

The same orientation as the control device for the closing door.

Control rack set for the delayed device (installing the door back end)

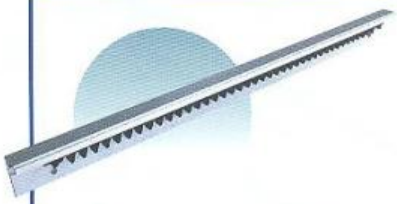

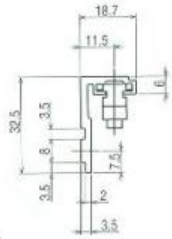

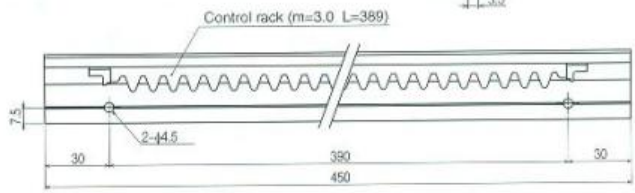

Side cover L

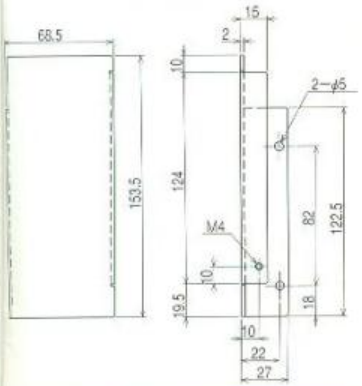

Side cover R

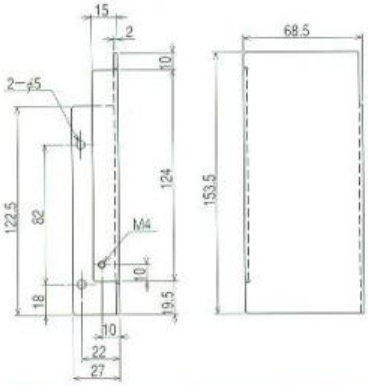

Remarks

- It is made of aluminum.
- The maintenance cover, back panel, and side cover (one on the right and another on the left) come with mounting screws.
- The apparent dimension is 155mm.

SLIDING CLOSER SYSTEM

For lightweight fittings in bathrooms, horizontal type for bathrooms with door weights of 10-30kg, 30-60kg and 60-80kg

NSC-CB23·36·48 series

The use of stainless steel and a unique sealing technology has created corrosion-resistant, long-life products.

Features

- These products can be used for long periods even in bathrooms and other hot corrosive environments. (They cannot be used in sauna rooms or other very hot environments.)
- The rotary part of the door roller is so designed as to be independent of dust or moisture, thus ensuring high corrosion-resistance and long stability.
- These products apply to doors weighing 10-80kg with openings not exceeding 1,500mm.
- The control device consists of a controlling-force centrifuge structure based on fluid friction resistance, thus ensuring high reliability.
- These products use a pull spring giving excellent performance and high durability (1 million operations) to close the door securely with a light force.

Specifications

Model		NSC-CB23-22/NSC-CB23-31			NSC-CB36-22/NSC-CB36-31			NSC-CB48-22/NSC-CB48-31		
Applicable doors	Weight [kg]	10-30			30-60			60-80		
	Width [mm]	700-1200	1200-1400	1400-1600	700-1200	1200-1400	1400-1600	700-1200	1200-1400	1400-1600
Max. stroke [mm]		1500								
Closing drive system		Spiral spring type								
Controlling system		Fluid friction resistance type								
Controlling time		8-15 seconds (with a door-opening distance of 900mm)								
Initial opening force [N]		3.5-4.6			4.7-6.9			7.0-8.0		
Durability		More than 1 million open/close operations								
Pull spring		PS-B02			PS-B03			PS-B04		
Rail length [m]		2.2	2.8	3.4	2.2	2.8	3.4	2.2	2.8	3.4

Parts details

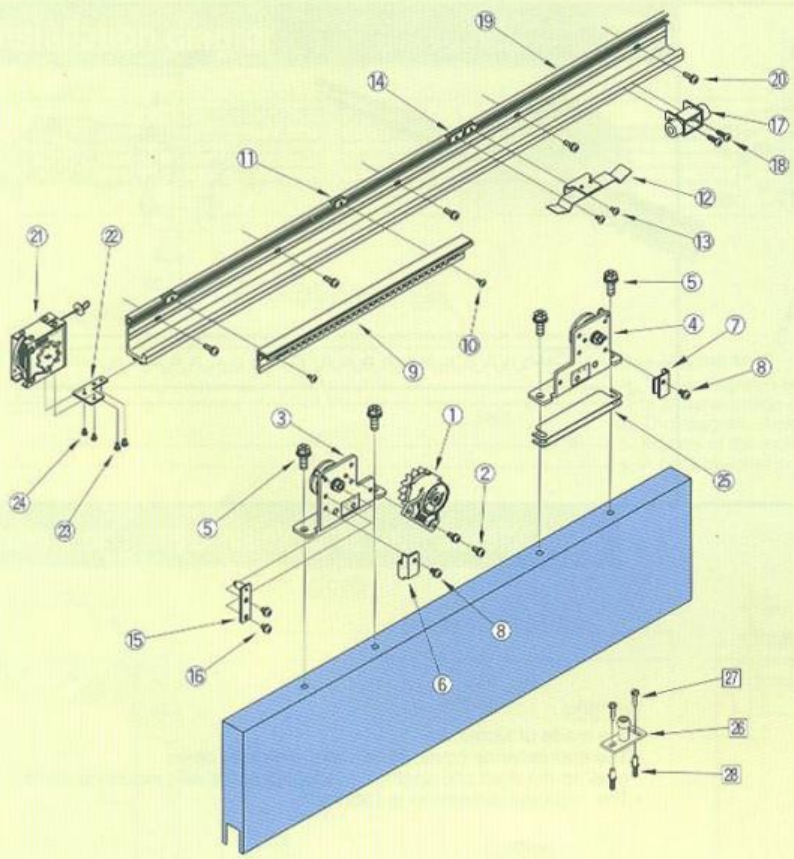

Part	No.	Remark	Q'ty
Control device	①	SC-CB03/SC-CB08	1
	②	M5×12 pan head screw	2
Hanger	③	Hanger A	1
	④	Hanger B	1
	⑤	M8×25 hexagon head bolt	4
Door retention	⑥	Door retention fiting Hanger A	1
	⑦	Door retention fiting Hanger B	1
	⑧	Pan head screw M5 × 8	2
Control rack set	⑨	Control rack set	1
	⑩	M4×8 truss screw	2
	⑪	Plate nut	2
Stop device	⑫	Plate spring	1
	⑬	M4×8 truss screw	2
	⑭	Plate nut	2
	⑮	Stop roller	1
	⑯	M5×8 pan head screw	2
Door stopper	⑰	Door stopper fitting	1
	⑱	φ5×16 pan head tapping screw	2
Rail	⑲	Rail L=2200 [L=3100]	
	⑳	M5×16 pan head screw	8[11]
		5×30 truss tapping screw	8[11]
Pull spring	㉑	Pull spring	1
	㉒	Pull spring fitting	1
	㉓	M4×5 pan head screw	2
	㉔	M3×8 pan head screw	2
Height adjusting plate	㉕	(T=1.0)	4
Guide roller (Option)	26	Guide roller	1
	27	5×25 hexagon tapping screw	2
		M5×12 hexagon head bolt	2
	28	Curl plug 6×30	2

Installation diagrams NSC-CB23·36·48

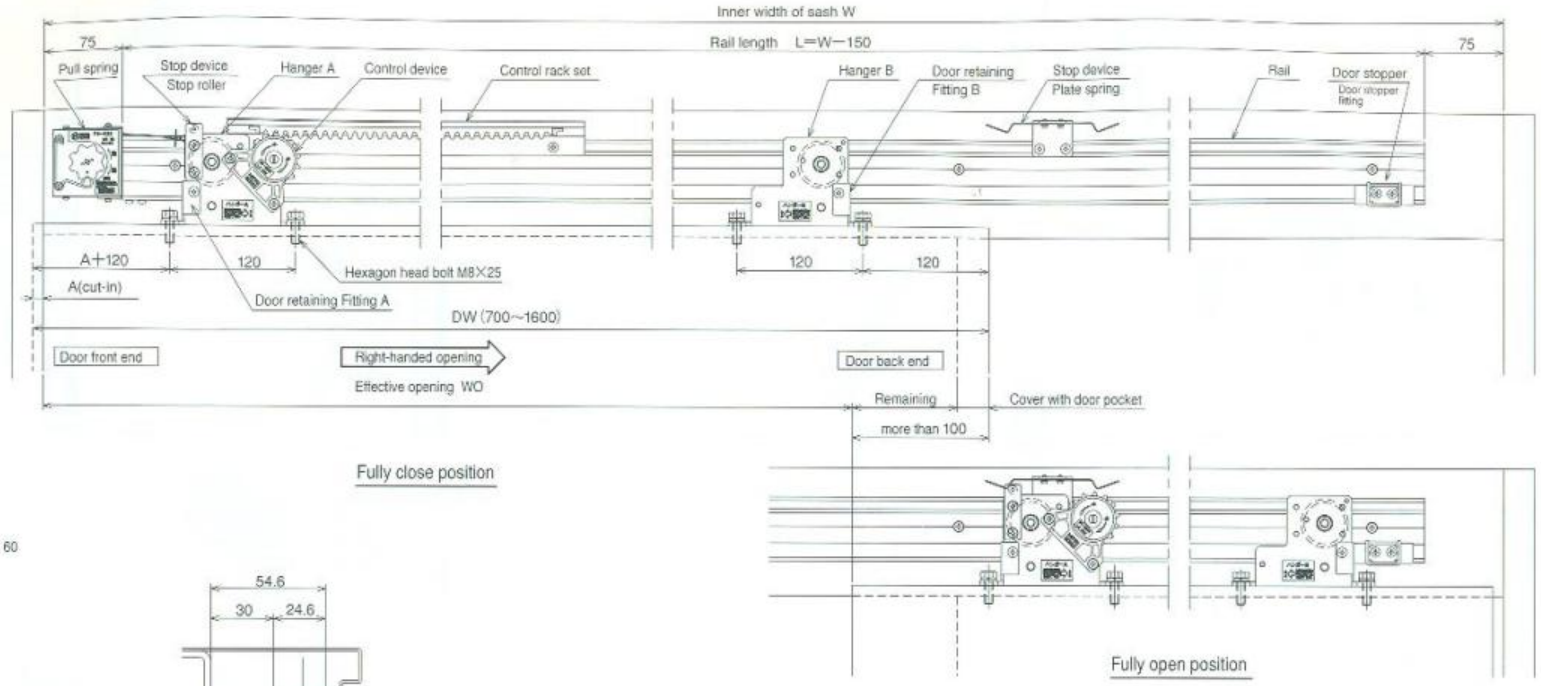

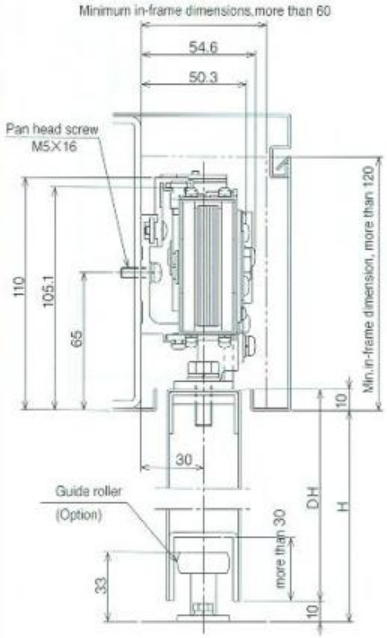

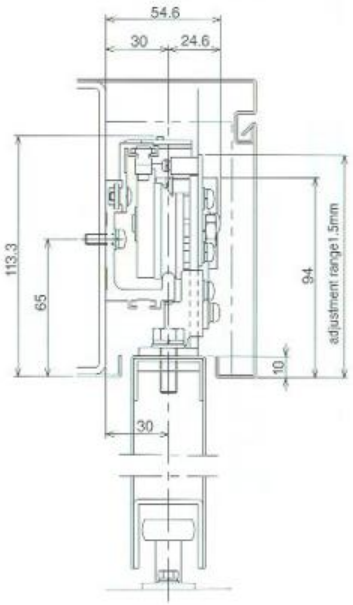

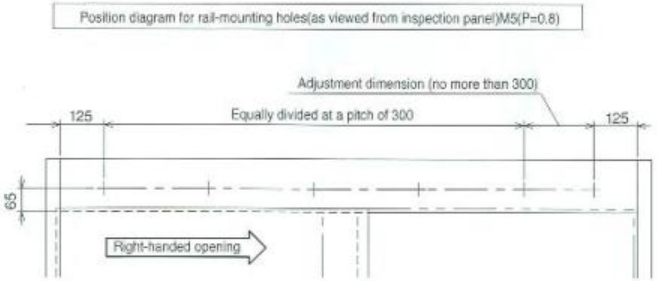

1. These diagrams represent a right-handed opening type.
   The left-handed opening type is a mirror image of these diagrams.
2. Door orientation is right-handed if the door is opened rightwards as viewed from the inspection panel, and left-handed if the door is opened leftwards
3. If slam the door many times ,install the another door stopper with door back end.

● High Corrosion proof evaluation

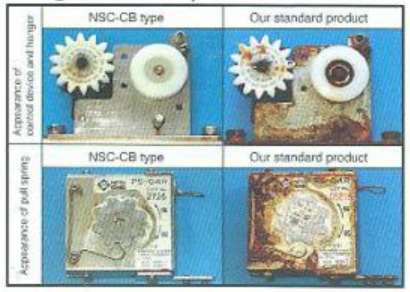

Rust becomes a problem when these products are used in bathrooms.
The use stainless steel makes these products dramatically more corrosion proof.

Test method : CASS test (JIS H 8502)
This test evaluates corrosion of specimens by adding small quantities of acetic acid and copper (Ⅱ) chloride (cupric chloride) to a solution of sodium chloride used in a salt spray test,thus increasing the specimens resistance to corrosion. This method is used mainly to evaluate the corrosion of automotive parts and other plated products. A corrosion test in acid environments is greater than salt spray tests.
48 hour × 3 times(144 hours in total)

Control device SC-C15

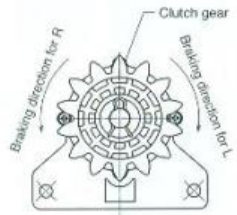

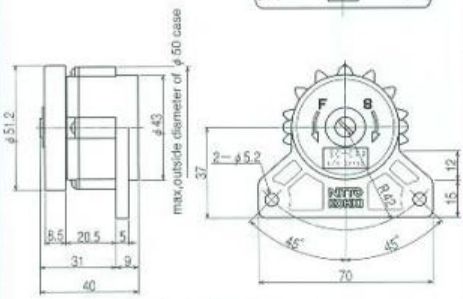

Shaft : Stainless steel
Case : Polyacetal
Clutch gear : Polyacetal

Control device bracket

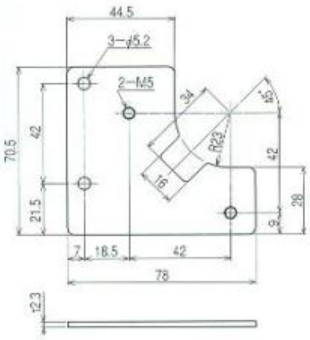

Bracket : Steel

Pull spring PS-12

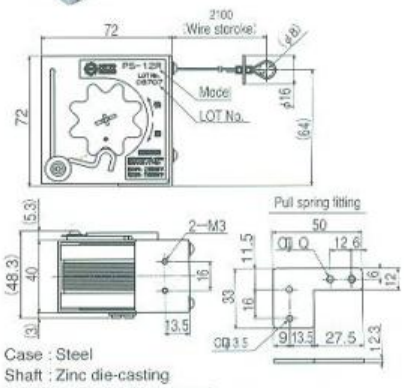

Case : Steel
Shaft : Zinc die-casting
Spiral spring : Stainless steel

Hunger A

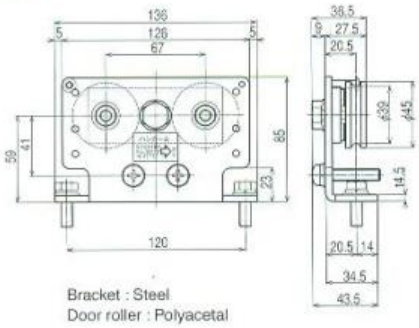

Bracket : Steel
Door roller : Polyacetal

Hunger B

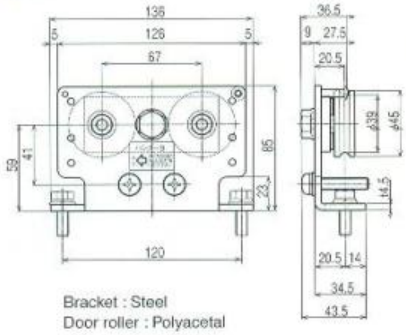

Bracket : Steel
Door roller : Polyacetal

Control rack set

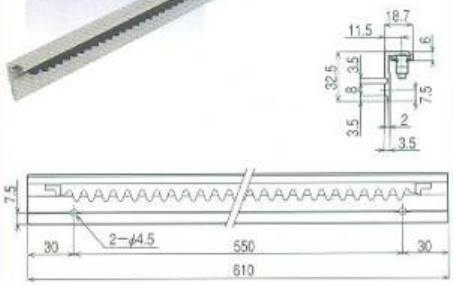

Control rack : Nylon
Rack retainer : Steel
Noise suppression rubber : Nitrile rubber

Rail

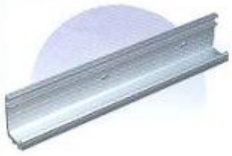

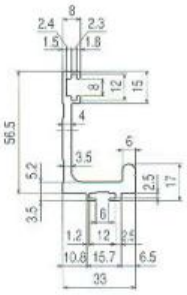

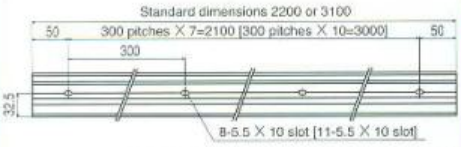

Note : The dimensions in [ ] apply when 3.1m rail used.

Rail : Aluminum section (Alumite-treated)

Door stopper fitting

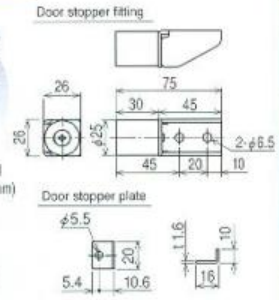

The Door stopper fitting is installed with pan head drill screw (φ6 x19mm) on the rail directly.

Bracket : Steel
Rubber door stopper : Synthetic rubber

Height adjusting plate

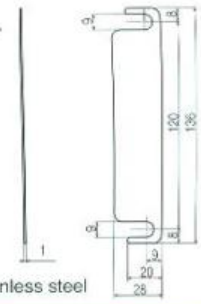

Height adjusting plate : Stainless steel

Stop device

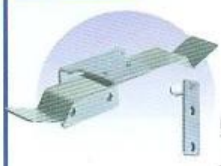

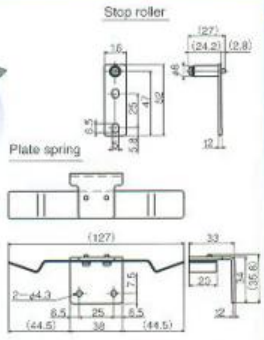

Spring :
Stainless steel
Other metal :
Stainless steel

Guide roller (Option)

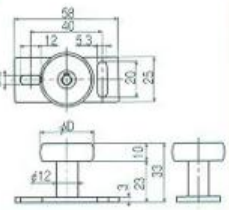

Plate: Stainless steel
Roller : Polyacetal

The roller diameter(φD)comes in the following four varieties			
φ16	φ25	φ30	φ35

Control device SC-CB03/SC-CB08

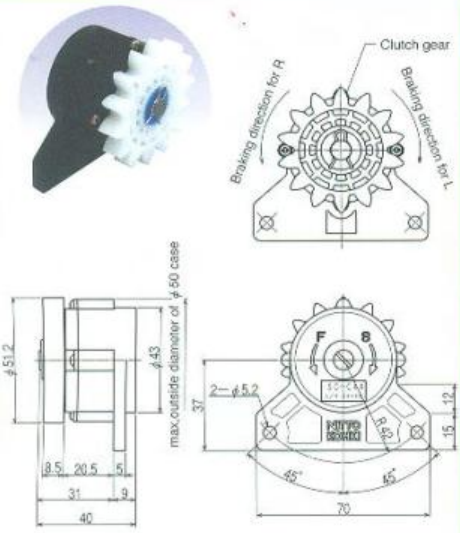

Shaft : Stainless steel
Case : Polyacetal
Clutch gear : Polyacetal

Pull spring PS-B02/PS-B03/PS-B04

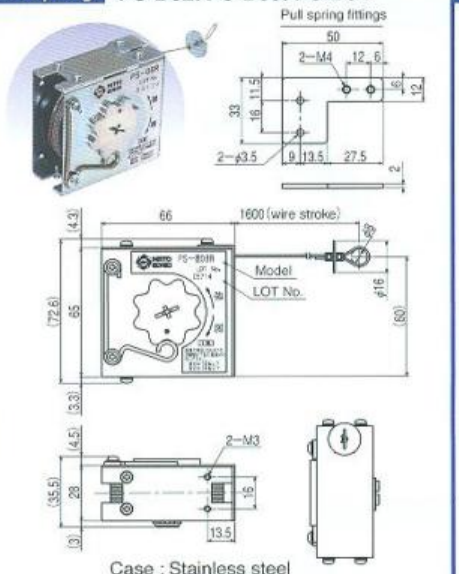

Case : Stainless steel
Shaft : Zinc die-casting
Spiral spring : Stainless steel

Hanger A

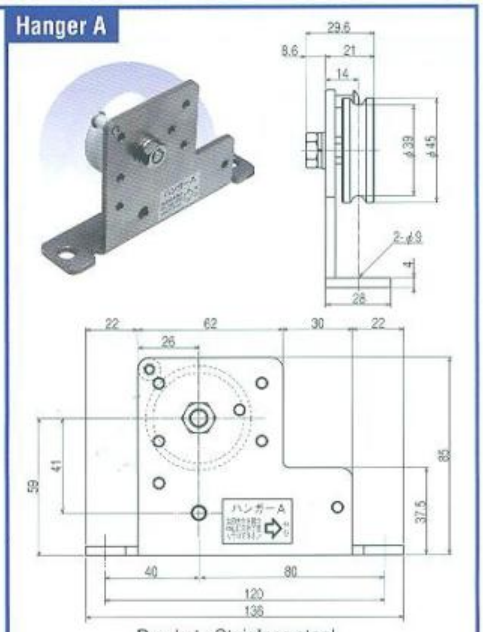

Bracket : Stainless steel
Door roller : Polyacetal

Hanger B

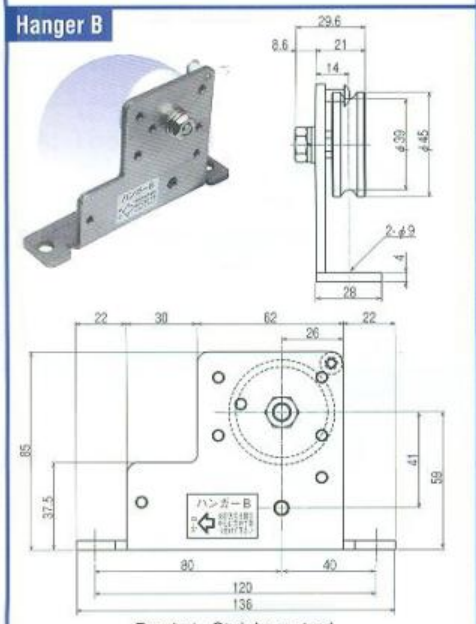

Bracket : Stainless steel
Door roller : Polyacetal

Control rack set

Control rack : Nylon
Rack retainer : Stainless steel
Noise suppression rubber : Nitrile rubber

Rail

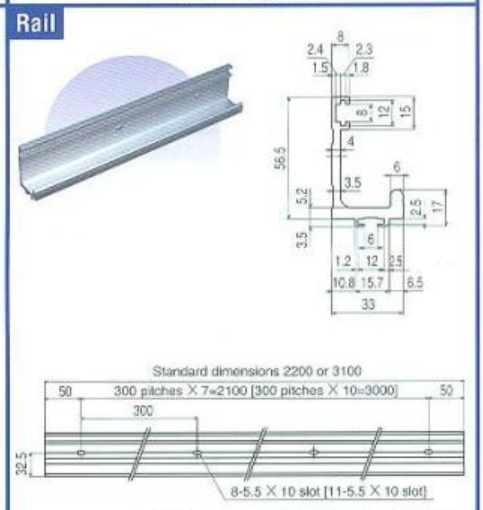

Note : The dimensions in [ ] apply when 3.1m rail used.

Rail : Aluminum section (Alumite-treated)

Stop device

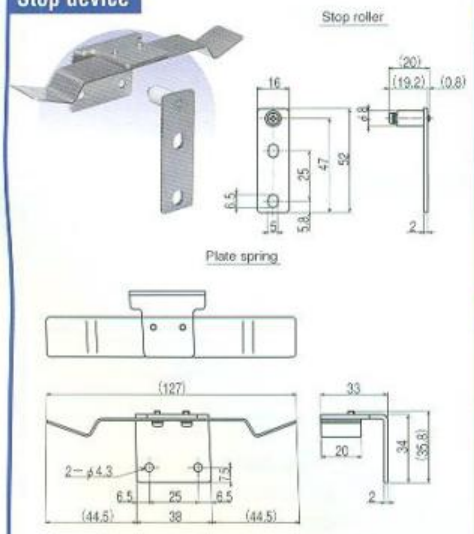

Spring : Stainless steel
Other metal : Stainless steel

Door stopper

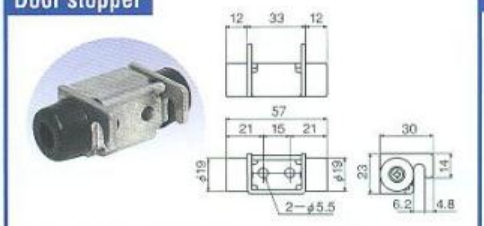

Bracket : Stainless steel
Rubber door stopper : Synthetic rubber

Guide roller (Option)

Plate: Stainless steel
Roller : Polyacetal

The roller diameter(φ D)comes in the following four varieties			
φ16	φ25	φ30	φ35

Door retaining fitting for CB type

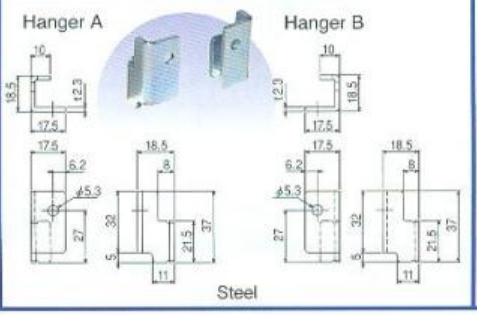

Steel

Height adjusting plate

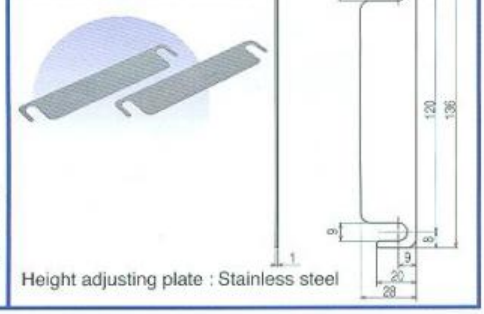

Height adjusting plate : Stainless steel

List of parts NSC-C/DSC-C

Control device

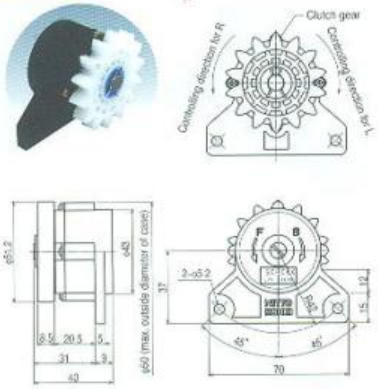

Shaft: Steel
Case: Polyacetal
Clutch gear: Polyacetal

Hanger A

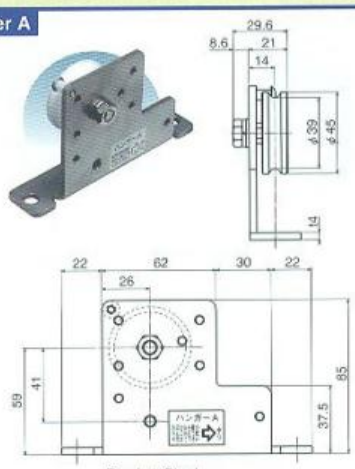

Bracket: Steel
Door roller: Polyacetal

Hanger B

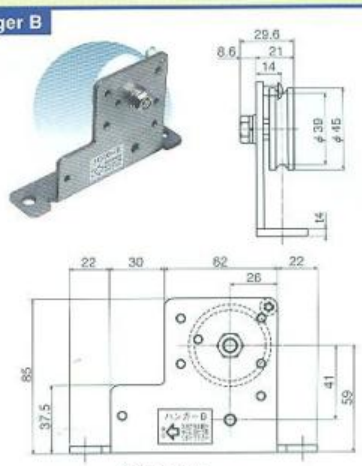

Bracket: Steel
Door roller: Polyacetal

Control rack set

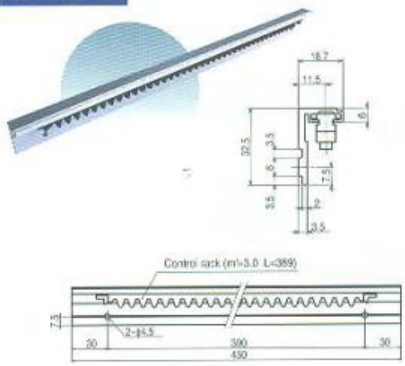

Control rack: Nylon
Rack retainer: Steel
Noise suppression rubber: Nitrile rubber

*The cross section is an enlarged view.

Stop device

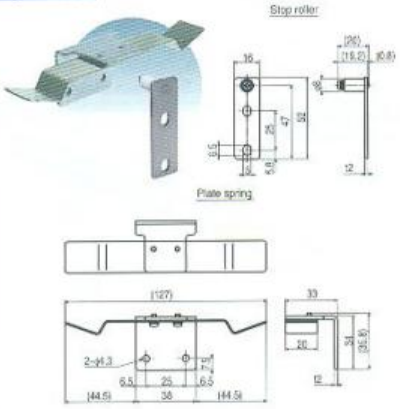

Spring: Stainless steel
Other metal: Steel

Rail

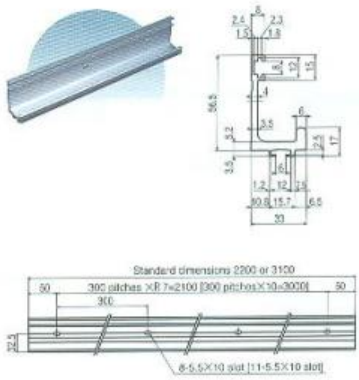

Rail: Aluminum section (alumite-treated)

*The cross section is an enlarged view

Guide rail

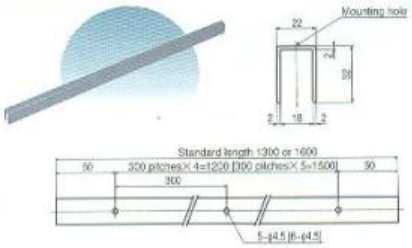

Guide rail: Aluminum section (alumite-treated)

*The cross section is an enlarged view.

Pull spring

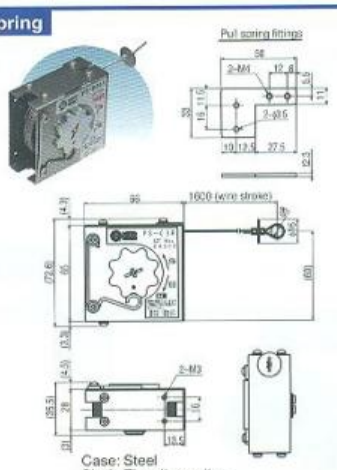

Case: Steel
Shaft: Zinc die-casting
Spiral spring: Stainless steel

Wooden door plate

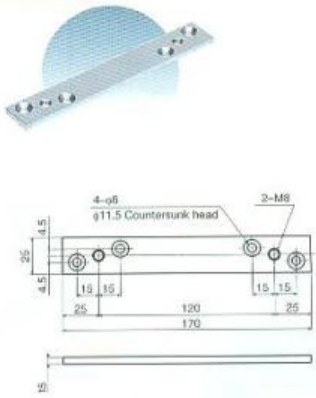

Door stopper

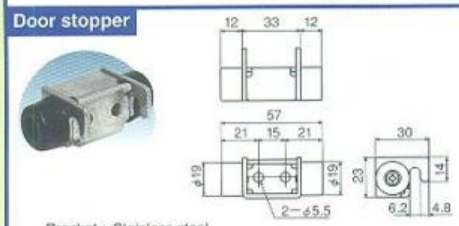

Bracket : Stainless steel
Rubber door stopper : Synthetic rubber

Guide roller

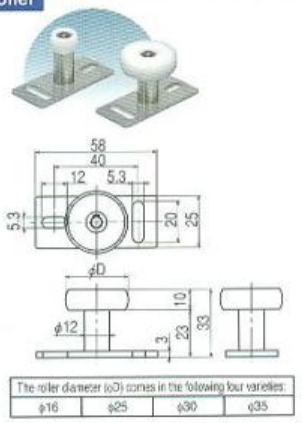

The roller diameter (φD) comes in the following four varieties:			
φ16	φ25	φ30	φ35

Plate: Stainless steel
Roller: Polyacetal

Height adjusting plate

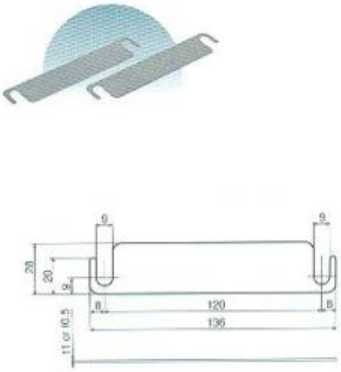

Door retaining fitting

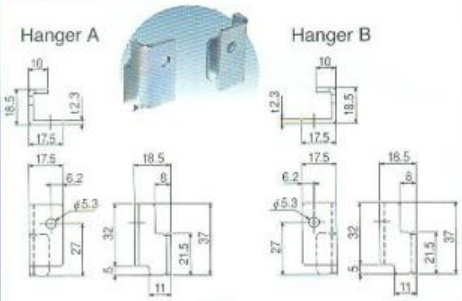

Steel

Sliding Closer

Q&A on Troubleshooting

Q: The door does not close fully.

A: The door, hanger, or other component contact the top cover or door pocket.

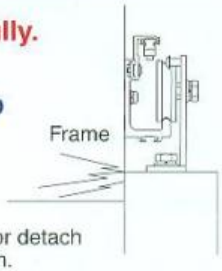

Action: Check the contact, then either reposition the hanger and/or guide roller in a different position or detach it and reinstall it in another position.

A: The guide roller contacts the top surface of the guide rail at the bottom of the door.

Action: Reinstall the door at the top. Slide the rail and/or other component.

A: The door is not installed vertically.

Action: Reinstall the hanger or guide roller in another position.

A: The door rollers of the hanger and the rail runway are scratched and dirty.

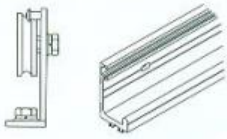

Action: Clean or replace the door rollers of the hanger and the rail.

A: The door rollers (front and back) of the hanger are not installed in parallel with the rail.

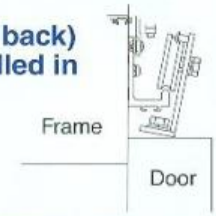

Action: Reinstall them in different positions to make them parallel.

A: The speed adjusting screw of the control device is overturned in the direction of slow (direction S indicated). (An excessive controlling force is applied.)

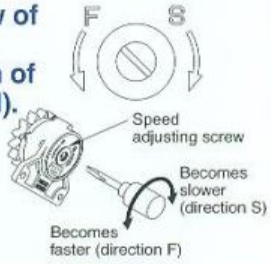

Action: Turn the speed adjusting screw counterclockwise (direction F indicated) to adjust the speed.

A: The pull spring is unadjusted (a horizontal type).

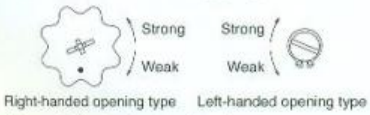

Action: Adjust the spring force.

A: The clutch gear of the control device is too strongly engaged with the control rack of the rail.

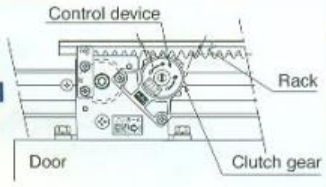

Action: Reinstall the hanger or guide roller at different positions.

Q: The door does not close fully or will not close stably.

A: The airtight rubber, mohair, or other material between the door and frame gets into contact, resulting in resistance imposed to the closing of the door.

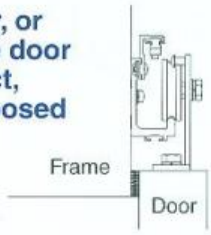

Action: Alleviate the contact.
Example: Cut the rubber or take another appropriate action.

Q: The door rattles.

A: Check that the screws for mounting the components remain tight enough.

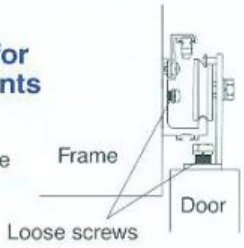

Action: Further tighten or retighten the mounting screws.

Precautions for preventing accidents

1. Do not use the product for unspecified door dimensions or door weight.
2. If the control device of the product becomes ineffective, the door will close vigorously, possibly catching one of your fingers or getting into contact or turning over. Should an oil leak occur, component damage or incidents will result in ineffective control, despite speed adjustment, replace the product promptly.
3. Do not disassemble or remodel the product. Should you do so, we will not guarantee the subsequent performance of the product.
4. Securely tighten the screws that mount the product. Failure to observe this precaution may cause product damage or accident.
5. Be sure to install the door-retaining screws. Failure to observe this instruction may derail or turn the door over.
6. Be sure to install the door stopper on the door back end.
7. Do not drop or strike any of the components. Failure to follow this precaution may cause a breakdown.
8. The closer incorporated in the product causes the door to close on its own. Therefore do not close the door fast with force. Any such practice may cause the door to close vigorously, resulting in an unexpected accident.
9. Take care not to let a child play by hanging on the door.
10. In case of rough operation, Be sure to install door stoper on the floor or door back end.

Precautions to be taken to ensure a long service life

1. Wipe off dust and dirt from the rail and door rollers.
2. Conduct periodic checks for loose screws and other anomalies.

User-friendly technology

AUTO HINGES

OTHER RELATED PRODUCTS

FLAG TYPE

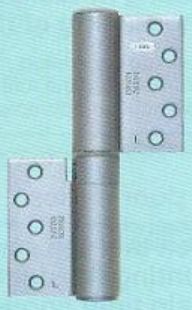

- Armless closer making a boast of Nitto Kohki, being easily installed on an arch door, etc.
- Various models according to types and sizes of doors (wooden, aluminum, lightweight steel, steel doors) are available from us.

PC series

- Drip-proof design
- Adopts an actuator with unique temperature sensor, thus assuring constant closing speed all the year round.

700 series

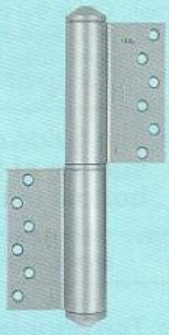

- They come with special sealing and stainless steel.
- A much wider range of uses including bathrooms and seashores.

BUTTERFLY TYPE

- Small, slim door closer, being most suitable for lightweight doors (for indoor type).
- Easy to install because of having butterfly shape.
- Usable in common for both right- and left-side opening.

CENTER HANG TYPE

- Most suitable for fire protection, open smoke ventilation and normally-opened / closed doors snd air supply doors.
- Concealed type (door built-in type.)

DISTRIBUTED BY

PT. CITRA AMANTOSA SEJATI

Fatmawati Festival D-1, Jl. RS. Fatmawati 50. Jakarta 12430, INDONESIA
phone : (021) 7591 6001| ✉ : info@cas.co.id | website : www.cas.co.id

Specifications and designs are subject to change at any time without notice.